MECH 261/262
Measurement Lab (& Statistics)

August 27, 2007

Final Exams and Midterm Tests
in Reverse Chronological Order until 2004

(FD1)/2612Exams/ExaMT781.tex

1 Introduction

On the following pages you will find all questions and answers, as they were to appear, on completed work sheets handed in by the student at the end of that final exam or midterm test. Worked out solutions will be added eventually but it has taken me 3.5 years to compile this lot in some semblance of order so don't expect miracles. Furthermore some questions are (very) bad and some answers are wrong. Unfortunately that's life but at least no attempt is made here to cover up such mistakes and assurances are given that most of these are caught before they accrue to the detriment of a student's final grade. In a nutshell, any small consensus of students' answers to a particular question, that differ from mine, triggers a re-solution by me and independently by a senior TA. Credit is thus given for correct answers. Furthermore allowance is made for "bad" questions by awarding full marks if the student made a reasonable attempt or, better still, identified the question as seriously flawed. An example solution is found on the page immediately after Q.1,2,3 on the 04-02-19 midterm. Notice how Q.3 is solved and due to ambiguity of that question, 3 out of the possible 6 multiple choices were deemed to be correct, acceptable answers.

(FD1)/Exams/ExaMT781.tex

1. A four active arm strain gauge bridge with 300Ω SR4 gauges that have gauge factor of 2 is loaded to a nominal maximum 1000 $\mu\varepsilon$. What is the resistance of each gauge? R_1 299.4Ω R_2 300.6Ω R_3 300.6Ω R_4 299.4Ω

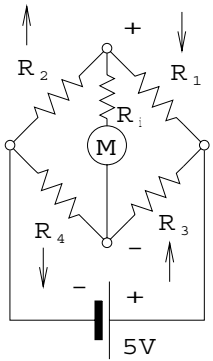

2. What is the sensitivity of this system if ...

$R_i \longrightarrow \infty$ 10 μV/$\mu\varepsilon$ R_i =10kΩ 9.709 μV/$\mu\varepsilon$ R_i =2kΩ 8.696 μV/$\mu\varepsilon$

3. A 0 to 10V ADC returns a reading of :-

9	8	7	6	5	4	3	2	1	0
1	0	0	1	1	0	1	1	1	0

If this instrument is perfect

what is the highest 6.085V

and lowest 6.075V

possible voltage this could represent?

Convert this to a Gray coded integer.

9	8	7	6	5	4	3	2	1	0
1	1	0	1	0	1	1	0	0	1

Now to a 2's complement number.

			9	8	7	6	5	4	3	2	1	0
1	1	1	0	1	1	0	0	1	0	0	1	0

Finally to a 6-digit 10's complement integer.

9	9	9	3	7	8

Midterm Test 08-03-03, 40min.

Name:- key

Student Number:-

(circle one) MECH 261 262

(FD1)MLT83c

4. A certain amplifier is specified as having a GBP of 25MHz. If it is incorporated into a system meant to provide a gain of +50dB, what is the high frequency corner frequncy?

about 79kHz

5. A modern fever thermometer must "settle" to within 0.05C of its true reading in 1s after a normal patient, with a temperature of 37C, sticks it under the tongue. Assuming an ambient (room) temperature of 20C (in all cases) how quickly must such a thermometer reach 39.5C when suddenly placed in an under-the-tongue-simulator calibration bath at 40C? 0.632855s

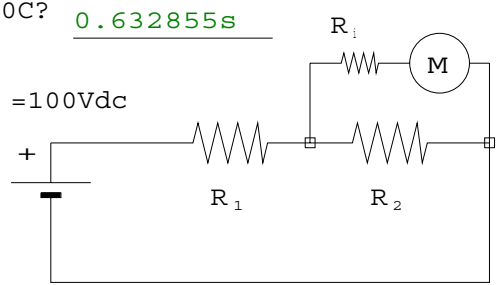

6. Choose the resistors R_1 and R_2 to make a 20:1 voltage divider, i.e., reduce the 100V supply to 5V across R_2 when the meter is not there, i.e., $R_i \rightarrow \infty$. You can use resistors of any value but all are rated at 0.25W, maximum.

R_1 36.1kΩ R_2 1.9kΩ

If R_i =20k what will the meter read? 4.586V

(Forget about the small increase in power due to decreased overall resistance.)

Bonus: The new Jeep Cherokee uses 16.5L/100 km. What's that in miles per U.S. gallon? 14.26

Midterm Test 08-03-05, 40min.

Name:- key

Student Number:- _____

(circle one) MECH 261 262

(FD1)MLT83e

7. I've found that in Europe my VISA card fails to read properly about 10% of the time. So I've taken to carrying two cards and they're equally (un)reliable. If I make 100 transactions during my trip and ask the merchant to try the second card whenever the first fails what is the most likely number of two-card failures I can expect? 1 is most likely
What is the probability of this happening? 0.3697 What is the probability that I complete my trip without experiencing any two-card failures? 0.366

8. Here are three different types of thermocouple output in mV at five temperatures.

20C	0.789mV	1.192	1.019
60	2.467	3.683	3.115
100	4.277	6.317	5.268
140	6.204	9.078	7.457
180	8.235	11.949	9.667
	type "T"	type "E"	type "J"

Find the linear least squares best fit coefficients a and b for each using a simple minimization of $\Sigma\Delta\ y^2$ (not a normal distance squared minimization)

a= 0.04657 a= 0.06727 a= 0.054095
b= -0.2628 b= -0.2835 b= -0.104298

9. Which type is most sensitive? E Least? T
Calculate the standard deviation of the five measurements for each thermocouple from their respective best fit line.
T 0.05503
E 0.05932
J 0.01787
What desireable property does type J have? It's the most nearly linear.

Midterm Test 08-03-07, 40min.
Name:- key
Student Number:-
MECH 262

(FD1)STT83g

MECH 261/262
Measurement Lab & Statistics
Midterm Test Solutions 2008

March 26, 2008

1 Question 1

If gauge factor is 2 and strain on all 4 gauges is 0.001 and their original resistance is 300Ω the up/down change will be $\pm(2 \times 0.001 \times 300) = \pm 0.6\Omega$. *I.e.*, $R_1 = R_4 = 299.4\Omega$, $R_2 = R_3 = 300.6\Omega$.

2 Question 2

If the meter input impedance R_i is infinite and $V_s = 5$V the sensitivity is given by

$$\left(\frac{R_2}{R_1 + R_2} + \frac{R_4}{R_3 + R_4}\right)\frac{V_s}{1000\mu\epsilon} = 10\frac{\mu V}{\mu\epsilon}$$

If $R_i = 10\text{k}\Omega$ and $2\text{k}\Omega$, respectively, the following seven simultaneous equations, based on Kirchhoff's node (current) and branch (voltage) laws, are solved simultaneously for V_1 and V_2.

$$i_1 - i_2 - i_i = 0, \;\; i_4 - i_3 - i_i = 0, \;\; 5 - V_1 - 299.4i_1 = 0, \;\; V_1 - 300.6i_2 = 0$$

$$V_1 - V_2 - R_i i_i = 0, \;\; 5 - V_2 - 300.6i_3 = 0, \;\; V_2 - 299.4i_4 = 0$$

This results in

$$V_1 - V_2 = 2.504854369 - 2.495145631 \rightarrow 9.708738\frac{\mu\text{V}}{\mu\epsilon}$$

and

$$V_1 - V_2 = 2.504347828 - 2.495652172 \rightarrow 8.695656\frac{\mu\text{V}}{\mu\epsilon}$$

3 Question 3

10V are divided among 1023 quanta. Each quantum is worth

$$\frac{10000}{1023} = 9.775171065\text{mV}$$

A count of 1001101110 represents $2^9 + 2^6 + 2^5$+E= 622.

$$622\frac{10000}{1023} = 6080.156403 \pm \frac{1}{2}\frac{10000}{1023} = 4.88759\text{mV}$$

The reading could represent anything from 6085.043988 to 6075.268817mV.

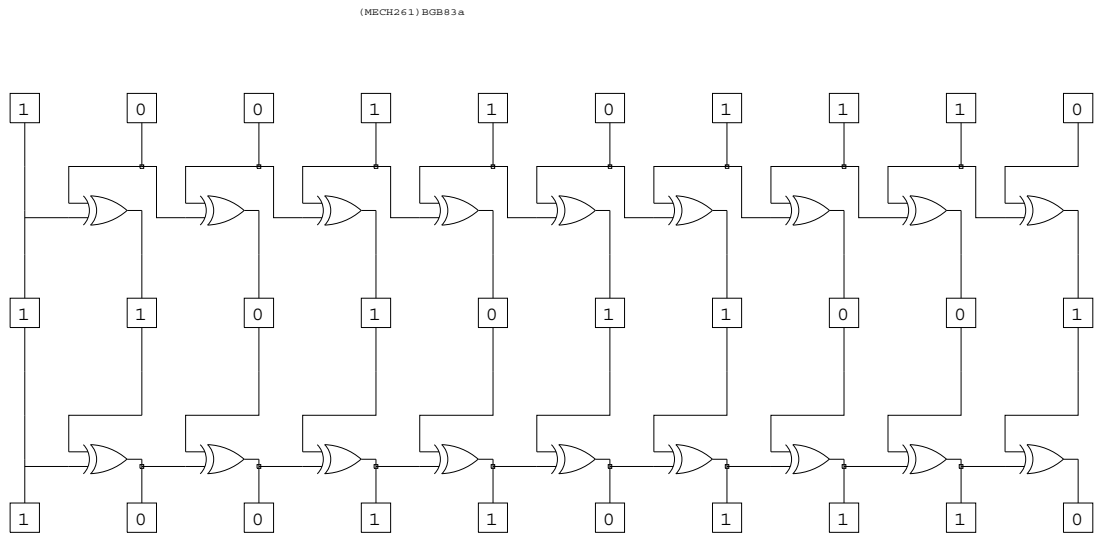

Figure 1: 10-Bit Binary-to-Gray-to-Binary Conversion

1001101110 is converted to 1101011001 in Gray code. The converter, followed by reconversion to binary is illustrated in Fig. 1.

In order to convert 1001101110 to 2's complement reverse the bits to 0110010001 and add 1 to get $\ldots 1110110010010$. Note the most significant leading 1's continue to the left indefinitely, implicitly, like most significant 0's in a positive number. Since the original count was 622 it becomes, upon negation, the 9's complement number $\ldots 999377$. Note how the leading most significant 9's replace leading 1's in 2's complement binary. Adding 1 gives the 10's complement $\ldots 999378$.

4 Question 4

A gain of +50dB corresponds to $50 = 20 \log_{10} G$.

$$\log_{10} G = 2.5 \rightarrow 10^{\log_{10} G} = G = 10^{2.5} = 316.227766$$

Since gain-bandwidth product is 25MHz

$$f_c = \frac{GBP}{G} = \frac{25000\text{kHz}}{316.227766} = 79.05694151\text{kHz}$$

5 Question 5

The fundamental first order response to a step input change $(\theta(\infty) - \theta(0))$ after time t is to attain a (temperature) rise of $(\theta(t) - t(0))$ according to the following special solution of the differential equation

$$\frac{e^{t/\tau} - 1}{e^{t/\tau}} - \frac{\theta(t) - t(0)}{\theta(\infty) - \theta(0)} = 0$$

The statement of specification says that at $t = 1$

$$\frac{e^{1/\tau} - 1}{e^{1/\tau}} - \frac{36.95 - 20}{37 - 20} = 0$$

This gives the *required* time constant as $\tau = 0.1715576139$s. The simulator is set up with a constant temperature bath at 40C and a "trigger" that measures the time interval t until the sensor output signal reached 39.5C and we wish to know the calibration time limit t_c at or below which the the timer must trigger if the sensor is "good". We now know τ from the specification.

$$\frac{e^{t_c/\tau} - 1}{e^{t_c/\tau}} - \frac{39.5 - 20}{40 - 20} = 0$$

The solution of this second expression gives $t_c = 0.6328553571$s.

6 Question 6

The first equation says that the voltage drop across the second resistor is 5% of the total voltage drop across both resistors in series.

$$\frac{R_2}{R_1 + R_2} - \frac{1}{20} = 0$$

The second equation says that the total voltage drop across the two resistors in series is the sum of the drop in each resistor due to the common current i that flows in both.

$$iR_1 + iR_2 - 100 = 0$$

The third equation says that the greater power dissipation in the resistor of higher value, R_1 must not exceed 0.25W.

$$i^2 R_1 - \frac{1}{4} = 0$$

This gives $i = 1/380$A, $R_1 = 36100\Omega$, $R_2 = 1900\Omega$ and a check with the third equation establishes that the power loss in R_1 is indeed $\frac{1}{4}$W. A $2000\Omega/$V meter on the 0-10V scale has an input impedance of $10 \times 2000 = 20\text{k}\Omega$. Putting this in parallel with R_2 gives an effective R_2

$$R_2^* = \frac{1}{\frac{1}{1900} + \frac{1}{20000}} = \frac{380000}{219} = 1735.159817\Omega$$

The meter reading is

$$\frac{V_s R_2^*}{R_1 + R_2^*} = \frac{100 \times 1735.159817}{36100 + 1735.159817} = 4.586104105\text{V}$$

The reason for bringing R_1 up to maximum allowable power is that in this way the *output impedance* of the voltage divider is minimized. This is a fundamental design principle. It's especially important if we've got a meter with low *input impedance*. $2000\Omega/$V is just about as low one can get with a commercial volt/ohm meter.

7 Bonus

L/U.S.gal. is 0.355(128/12)=3.7866.... Miles /100km is 62.13711922. The product is 235.2925581. This divided by 16.5 gives 14.26015504mpg. Since the imperial gal. is 6/5U.S.ga., that's 17.11218605 mpG, "big gallon".

8 Question 7

This is clearly a binomial distribution problem. Since the 10% card failure rate is the same for each card and independent of each other, a failure occurs when both fail, one immediately after the other. Therefore $P_\mu = 0.01$. To have exactly r failures in n tries

$$P(r:n) =_n C_r P_\mu^r (1 - P_\mu)^{n-r}$$

In all cases $n = 100$ so let's start with $r = 0$ and work up until $P(r:n)$ starts to diminish.

$$P(0:100) =_{100} C_0 \times (0.01)^0 (0.99)^{100} = 0.3660323413$$

$$P(1:100) =_{100} C_1 \times (0.01)^1 (0.99)^{99} = 0.3697296376$$

$$P(2:100) =_{100} C_2 \times (0.01)^0 (0.99)^{98} = 0.1848648188$$

From this we conclude that the most likely is one double failure per trip at almost 37% of the time but close behind is the chance 36.6% chance of completing the trip without embarrassment.

9 Questions 8 and 9

Here we see an opportunity to write a small program where up to 10 combinations of x and y can be input after specifying that number n. The computation of coefficients a and b are done conventionally, without even bothering to zero on the mean. After a line has been fit, the y-deviations from the fit line of all y-values are squared and added and their standard deviation is computed.

```
100 DIM X(10),Y(10),XY(10),X2(10)
110 INPUT N
120 SX=0:SY=0:SXY=0SX2=0
130 FOR I=1 TO N
140 INPUT X(I),Y(I):SX=SX+X(I):SY=SY+Y(I):SXY=SXY+X(I)*Y(I):SX2=SX2+X(I)^2
150 NEXT I
160 D=N*SX2-SX^2:A=(N*SXY-SX*SY)/D:B=(SX2*SY-SX*SXY)/D
170 SSD=0
180 FOR I=1 TO N
190 SSD=SSD+(Y(I)-A*X(I)-B)^2:
200 NEXT I
210 LPRINT SQR(SSD)/(N-1),A,B:STOP:END
```

Thermocouple type	σ	a	b
T	0.05503354	0.04657249	−0.2628484
E	0.05932262	0.06727248	−0.28345
J	0.01786823	0.054095	−0.1042984

The values of a are sensitivity expressed in mV/C. The type E couple is clearly the most sensitive and the type T is the least sensitive among the three. The type J couple is the most linear. This may not be quite so obvious from the graph in Fig. 2.

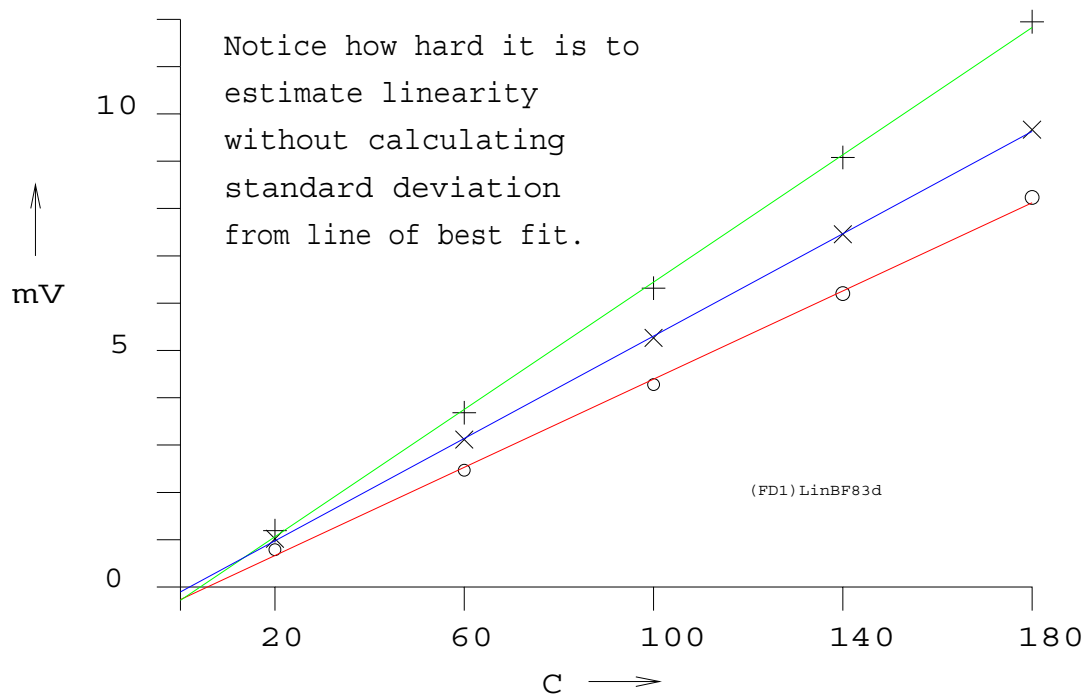

Figure 2: Linearized Thermocouple Characteristics

(MECH261/262)MLSCTSol08.tex

1. A type "E" thermocouple is used as a sensor to accurately control the temperature of an oil bath to 100C. Assuming that the reference junction is held at 22C, what is the output of this system? 5.002mV

If this signal can be read to $\pm 1\,\mu$ V, estimate what is the smallest change in temperature that can be detected. ±0.015C

2. A transparent circular disc is encoded with a 6-level Gray code on 6 concentric tracks. Express the angular resolution of this device. I.e., what is the change in angle (degrees) that can be detected? ±1/2bit=2.8° → 5.6° What is the reading depicted? 104.1±5.6°

(See diagram on MLXA7C1.)

3. A pitot tube connected to an inclined manometer gives a reading of 57.4mm at 30 °. If the room temperature is 19C and the barometer reads 743mm Hg estimate the velocity of the air approaching. 19.52 m/s

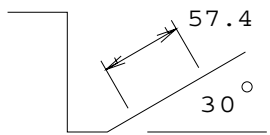

Manometer fluid is alcohol, SpG=0.8.

Final Exam 07-12-19

Name:- key

Student Number:-

(circle one) MECH 261 262

(FD1)MLXA7C2

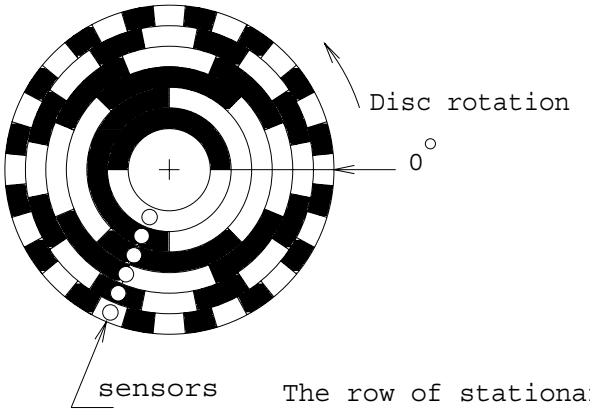

The row of stationary sensors read "1" on black patches,
... "0" on clear ones.

011(0/1)10

Final Exam 07-12-19

Name:- key

Student Number:-

(circle one) MECH 261 262

(FD1)MLXA7C1

4. What does the meter read with all gauges at 1000 micro-strain if they have unstrained resistance of 300 Ω a) Show with up/down ↑↓ arrows which of the resistors in the 4 arm bridge have inceased/decreased. b) Calculate their respective resistances. Assume all gauges have increased or or decreased by the same value ΔR. Gauge factor=2.

V= 10mV

R_1 299.4 Ω R_2 300.6 Ω

R_3 300.6 Ω R_4 299.4 Ω

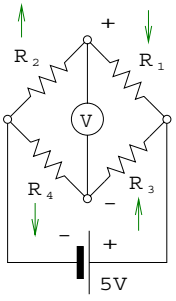

5. Find the a) maximum and b) estimated uncertainty in the meter reading if V_s =5V±10mV, R =300 Ω ±0.001 Ω , Δ R=??±10 Ω

a) ±20.2mV, ±0.2% full scale b) ±20.0 μV

6. A dead-weight tester is meant to calibrate two types of Bourdon pressure gauge. One type measures 0-10Atm. the other 0-100Atm. If the two piston assemblies can be tailored to both have a mass of exacltly 250g and there are wieghts of up to 5kg mass what are the two required cylinder diameters?

0-10Atm 11.241mm 0-100Atm 3.555mm

What are the minimum pressures that can be detected accurately?

0-10Atm 0.2439At 24.71kPa 0-100Atm 2.439At 247.1kPa

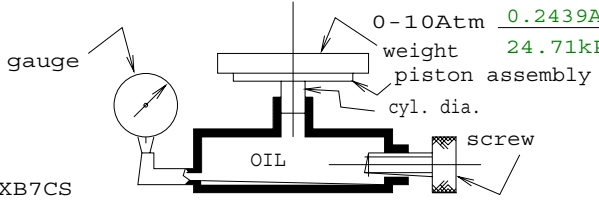

Final Exam 07-12-19

Name:- key

Student Number:-

(circle one) MECH 261 262

(FD1)MLXB7CS

7. Twenty random numbers have been sorted into five bins. Taking this as a probability mass function express the "expected value" 4.4 and the probability represented by each bin.

0-2 7/20 2-4 1/20 4-6 4/20 6-8 7/20 8-10 1/20

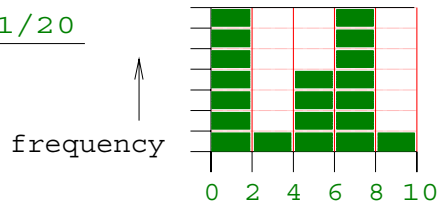

8. Exhaustive sampling experiments show that 10% of a production run of precision 4mm dia. steel drill rod is 4.001mm or greater while 5% is 3.9995mm of less. Assuming normal or Gaussian distribution, find the mean μ and standard deviation σ of this population.

μ 4.00034mm σ ±0.00051mm

9. In an EUS carnival there are gambling games to collect money for worthy causes. At one of the booths you are dealt 5 cards starting with a full deck of 52. You bet $1 that there will be at least one pair dealt to you. If there is, you win $0.25. What is the profit margin for the "house"? Express your answer as a percentage of the total amount bet as being 100%. Base your answer on statistical probability. 0.345-0.25=0.195 , 19.5%

Win/loss odds are 128171/195755
-vs- 67584/195755.

Name:- key

Student Number:-

MECH 262

(FD1)STXA7Cs

2007 Measurement Final Answers and Solutions

(FD1)FXF07Sol7B3.tex

December 27, 2007

1 Problem 1.

Below are the relevant tabulations for a type "E" (chromel-constantan) thermocouple at 20, 40, 80, 100 and 120C.

20C	1.192mV
40C	2.419mV
80C	4.983mV
100C	6.317mV
120C	7.683mV

Linear interpolation between 20 and 40C produces

$$\frac{2}{20}(2.419 - 1.192) + 1.192 = 1.315\text{mV}$$

Therefore the measured output is

$$6.317 - 1.315 = 5.002\text{mV}$$

On either side of 100C we get

$$6317 - 4983 = 1334\mu\text{V}/20\text{C} \rightarrow 66.7\mu\text{V/C and } 7683 - 6317 = 1366\mu\text{V}/20\text{C} \rightarrow 68.3\mu\text{V/C}$$

Taking the average gives 67.5μV/C and the reciprocal is about $\pm 0.015\text{C}/\mu\text{V}$.

2 Problem 2.

A 6-level code contains $2^6 = 64$ quanta or "counts" from 0 to 63. Each quantum "patch" subtends $2\pi/64$ radians or $360/64 = 5\frac{5}{8}$ degrees. Angular resolution is therefore $\pm 1/2$ bits or ± 2.8125 degrees. The reading depicted is, starting with the most significant, innermost, bit 011×10. The "$\times$" indicates this may be either a "0" or a "1". Notwithstanding, Fig. 1 shows the following.

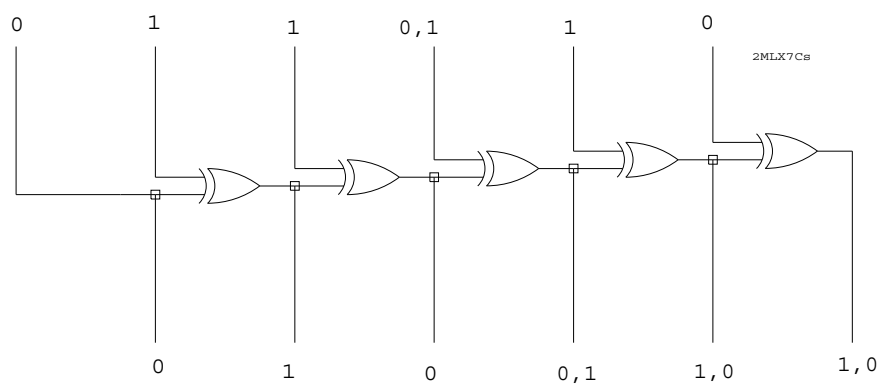

Figure 1: Gray to Binary Conversion

For the specified input the straight binary output is 010011 or 010100, a count of 19 or 20 that might be interpreted literally as 101.25° or 106.875°, $\pm 2.8125°$. So the reading might actually be anywhere between 98.4375° and 109.6875°, an uncertainty span of 11.25°. This comes $104.0625° \pm 5.626°$.

3 Problem 3.

This problem is solved by equating the dynamic (velocity) pressure to the impact (stagnation) pressure measured by the Pitot tube.

$$p_{dynam} = \frac{\rho_{air} V^2}{2} = \rho_{mano} g h = p_{impact}$$

First the air density is calculated.

$$\rho_{air} = \frac{p_o}{RT} = \frac{\frac{743}{760} \times 101300}{287 \times (273 + 19)} = 1.1817 \text{kg/m}^3$$

Then the manometer pressure in Pa is determined.

$$p_{impact} = p_{mano} = 800 \times 9.81 \times \frac{0.0574}{2} = 225.24 \text{N/m}^2$$

The first equation can now be solved having taken into account the density of the manometer fluid (800kg/m^3) and inclination ($30° \rightarrow h = 57.4\text{mm} \times \sin 30°$).

$$V = \sqrt{\frac{2 \times 225.24}{1.1817}} = 19.52 \text{m/s}$$

4 Problem 4.

Since the all gauges are at nominal maximum strain of $1000\mu\epsilon$ and the gauge factor is 2 the "up" gauges go to

$$300\Omega + 2 \times 0.001 \times 300\Omega = 300.6\Omega$$

Similarly the "down" gauges decrease by the same amount and go to 299.4Ω. Since the "+"-sign for voltage appears at the upper corner of the bridge R_1 and R_4 must be the "down" gauges while the greater voltage drops must occur across the "up" gauges, R_2 and R_3. The voltage V_{12} is given by

$$V_s \frac{R_2}{R_1 + R_2} = 5 \frac{300.6}{600} = 2.505$$

Similarly V_{34} is

$$V_s \frac{R_4}{R_3 + R_4} = 5 \frac{299.4}{600} = 2.495$$

Therefore the meter V reads $2.505 - 2.495 = 0.01$ or 10mV.

5 Problem 5.

Stating the result for Problem 4 a little more formally

$$V = \frac{V_s R_2}{R_1 + R_2} - \frac{V_s R_4}{R_3 + R_4} = \frac{V_s}{2R_o} \left[(R_o + \Delta R) - (R_o - \Delta R) \right] = \frac{V_s \Delta R}{R_o}$$

Now we can write

$$\frac{\partial V}{\partial V_s} = \frac{\Delta R}{R_o}, \quad \frac{\partial V}{\partial \Delta R} = \frac{V_s}{R_o}, \quad \frac{\partial V}{\partial R_o} = \frac{V_s \Delta R}{R_o^2}$$

and

$$w_{Vs} = 0.01, \quad w_{\Delta R} = 0.00001, \quad w_{Ro} = 0.001, \quad R_o = 300, \quad V_s = 5, \quad \Delta R = 0.6$$

So maximum uncertainty is

$$\left| \frac{w_{Vs} \Delta R}{R_o} \right| + \left| \frac{w_{\Delta R} V_s}{R_o} \right| + \left| \frac{w_{R_o} V_s \Delta R}{R_o^2} \right| = 20.2\mu\text{V}$$

and the estimated uncertainty is

$$\sqrt{\left(\frac{w_{Vs}\Delta R}{R_o}\right)^2 + \left(\frac{w_{\Delta R}V_s}{R_o}\right)^2 + \left(\frac{w_{R_o}V_s\Delta R}{R_o^2}\right)^2} = 20.0\mu\text{V}$$

If one calculates individual contributions to uncertainty it becomes obvious that uncertainty due to V_s is 20×10^{-6} while that due to ΔR and R_o are $\frac{1}{6} \times 10^{-6}$ and $\frac{1}{3} \times 10^{-7}$, respectively. That's why there's so little difference between maximum and estimated uncertainties. As it stands, uncertainty is about $\pm 0.2\%$ of full-scale out of balance voltage. A lot could be gained with a better power supply.

6 Problem 6.

For reference, a standard atmosphere is 101.325kPa while a "bar" is 100kPa. Applying Pascal's Principle

$$\frac{W}{\pi r^2} = \frac{10.25 \times 9.81}{\pi r^2} = \left\{ \begin{array}{r} 1013250\text{Pa} \\ 10132500\text{Pa} \end{array} \right.$$

Solving for r for both cases gives diameters

$$\left. \begin{array}{r} d_1 = 11.241\text{mm} \\ d_2 = 3.555\text{mm} \end{array} \right\}$$

Since the 0.25kg piston assembly weight is always there and this is $\frac{1}{41}$ of the total, maximum weight of 10.25kg we can measure down to

$$\frac{1}{41} = 0.2439\text{Atm} \equiv \frac{1013.25}{41} = 24.71\text{kPa}$$

with the 10Atm gauge and 10 times that with the 100Atm gauge.

7 Problem 7.

Statistics: MECH 262 only.
Although we don't know the individual values of the 20 numbers we can conclude that there are

- 7 in the 0-2 range with a mean of 1,
- 1 in the 2-4 range with a mean of 3,
- 4 in the 4-6 range with a mean of 5,
- 7 in the 6-8 range with a mean of 7 and
- 1 in the 8-10 range with a mean of 9.

so

$$(7 \times 1 + 1 \times 3 + 4 \times 5 + 7 \times 7 + 1 \times 9)/20 = 4.4$$

"Expected value" means "mean" in this case, *i.e.*, 4.4.
Given this distribution and randomly choosing any number between 0 and 10 produces the conclusion that the probabilities are

$$P_{0-2} = \frac{7}{20}, \;\; P_{2-4} = \frac{1}{20}, \;\; P_{4-6} = \frac{4}{20}, \;\; P_{6-8} = \frac{7}{20}, \;\; P_{8-10} = \frac{1}{20}$$

8 Problem 8.

Statistics: MECH 262 only.
Refering to Table 6.3 on p.136 we can find z that corresponds to a "right tail area" of 10% and a "left tail area" of 5%. These are, respectively,

- $z_r = 1.28166\ldots$, using linear interpolation between the values $z = 1.28 \rightarrow 0.3997$ and $z = 1.29 \rightarrow 0.4015$. Note that the 40% integral area has a 10% right hand tail.
- $z_l = 1.645$, using linear interpolation between the values $z = -1.64 \rightarrow 0.4495$ and $z = -1.65 \rightarrow 0.4505$. Note that the 45% integral area has a 5% left hand tail.

From the change-of-variable definition

$$z = \frac{x_i - \bar{x}}{\sigma}$$

one gets two equations.

$$\begin{aligned} \bar{x} + 1.28166\ldots\sigma - 400.1 &= 0 \\ \bar{x} - 1.645\sigma - 3.9995 &= 0 \end{aligned}$$

that make $\bar{x} = 4.000343$mm and $\sigma = 0.0005125$mm.

9 Problem 9.

Statistics: MECH 262 only.
The "tree" for two-of-a-kind from a straight five card deal from a full 52 card deck is shown in Fig. 2.

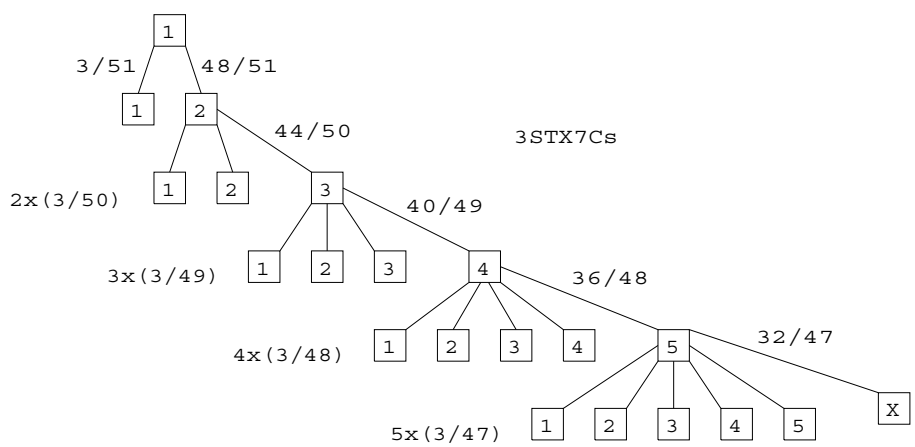

Figure 2: Probability:- "Two-of-a-Kind"

It shows two ways to get the answer. Following the right-hand branch at every juncture, all the way to the failure node [×], shows the probability of *not* getting a pair as

$$\frac{48}{51} + \frac{44}{50} + \frac{40}{49} + \frac{36}{48} + \frac{32}{47} = \frac{67584}{195755}$$

or about 34.52%. That means the player stands to win 65.47% of the time while the house wins only 34.52% of the time. If it pays out only 25 cents per loss it gets to make a profit of 19.5% on every dollar bet ... in the long run. The other, long way to solve this problem is to evaluate every way a player may draw a pair. That means adding

up the probability products along the 15 paths that end in $[1], [2], [3], [4]$ or $[5]$ to get the probability of drawing a pair thus.

$$\frac{3}{51} + \frac{48}{51}\frac{6}{50} + \frac{48}{51}\frac{44}{50}\frac{9}{49} + \frac{48}{51}\frac{44}{50}\frac{40}{49}\frac{12}{48} + \frac{48}{51}\frac{44}{50}\frac{40}{49}\frac{36}{48}\frac{15}{47} = \frac{128171}{195755}$$

One may check as follows.

$$\frac{67584}{195755} + \frac{128171}{195755} = 1$$

1. Given the series of four 1:10 inverting amplifiers shown below, specify:-
a) The value of R_1 in each case, b) The value of R_3 such that the output voltage v_o =10V when the input voltage v_i =8mV and R_2 =22kOhm.

R_1 = 2.2k Ω

R_3 = 15.4k Ω

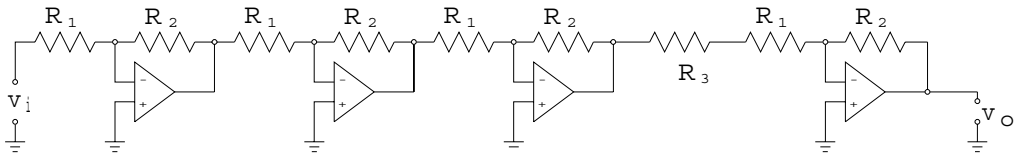

2. A 10-bit 0 to +10V (unipolar) ADC is connected to measure v_o. When v_o =10V it reads a full-count of 10 ones 1111111111. a) What decimal number does that correspond to?

1023

b) If a strain guage bridge shows an out of balance voltage of 8mV at ϵ =0.1% then what is v_o and the count when ϵ =0.00075?

7.5V

(binary) and 1011111111

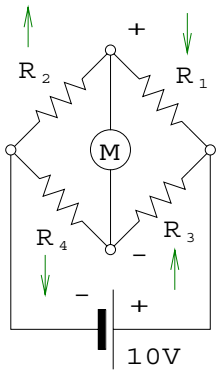

3. When meter M reads 8mV as indicated and the 4 strain gauges have unstrained resistance of 300 Ω a) Show with up/down ↑↓ arrows which of the resistors in the 4 arm bridge have inceased/decreased. b) Calculate their respective resistances.

R_1 299.76 Ω R_2 300.24 Ω

R_3 300.24 Ω R_4 299.76 Ω

Assume all gauges have increased or or decreased by the same value ΔR.

Midterm Test 07-10-29, 40min.

Name:- key

Student Number:-

(circle one) MECH 261 262

(FD1)MLT7A3

4. A weigh-scale is calibrated with 3 accurate weights of mass 20kg, 60kg and 100kg. The corresponding strain gauge force transducer bridge outputs are 1.7mV, 5.8mV and 7.9mV. Find the linear coefficients in y=ax+b where y is output and x is the applied weight.

a= 0.0775 b= 0.4833 What is the sensitivity according to this calibration? 0.0775mV/kg

5. Given a parabolic wave-form consisting of a periodic series of upward "lumps" of amplitude 5 and wave-length 4, find the RMS amplitude value. 3.651

$y=5-(5/4)x^2$

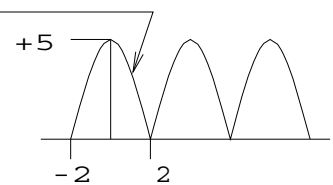

6. Given an under-the-tongue thermometer with time constant τ =4s and a patient with a temperature of 39.5C. Assuming a 1st order response and a precision of $\pm$0.5C, how long should one wait to get an accurate reading if the thermometer was at 20C to begin with? 14.55s

Hint:- $\frac{y-y_i}{y_e-y_i}=(1-e^{-t/\tau})$

Midterm Test 07-10-31, 40min.

Name:- key

Student Number:-

(FD1)MLT7A5

(circle one) MECH 261 262

7. Sort the following 20 random numbers into 5 bins. Label the bin boundaries and construct the appropriate bar chart. It most closely represents a uniform random distribution.

0.46,0.66,5.30,1.97,5.49,6.29,4.81,0.74,7.08,3.05
0.32,7.40,0.31,7.31,8.41,7.25,6.76,5.56,7.90,1.74

(or bimodal)

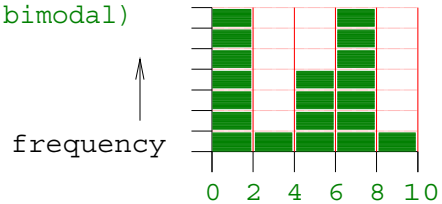

8. You're building a plywood boat. The sheets must be clear of knots. The best marine ply you can find guarantees that no more than 1 sheet in 10 has knots. If the boat needs 10 sheets how many sheets should you buy in order that you run, at worst, a 5% (1 in 20 tries) risk of having to go back to the store? 11(Poisson)
If you buy this amount, what is the actual risk (in % probability) that you won't have 10 good sheets of plywood? about 0.5% Is there another way to get the answer? Using a binomial model will give 13 sheets at 3.4% risk.

9. Yucky Junk Food, Inc. made a survey of a population consisting of 60% adults, 40% teens and 30% children. 50% of adults like the stuff. So do 80% of teens and 60% of the kids. Targeting the potential consumers how much of $1M advertising should they allot to each age group? Toward adults $375000 Toward teens $400000 Toward kids $225000

Hint:- Bayes' theorem?

Midterm Test 07-11-02, 40min.
Name:- key
Student Number:- _____
MECH 262

(FD1)MST7Bb

MECH 261/262
Measurement Lab (& Statistics)

October 29, 2007

Mid-Term Test 07-10-29

1 Question 1., Four Operational Amplifiers

- Since all four inverting op-amps have $|G| = 10$ and $R_2 = 22\text{k}\Omega$

$$G = -\frac{R_2}{R_1}$$

therefore $R_1 = 2.2\text{k}\Omega$.

- Since the first three stages get us up to $(0.008\text{V.})(-G_1)(-G_2)(-G_3) = -8\text{V.}$, the last stage must have a gain of $-\frac{10}{8}$. Therefore

$$\frac{R_2}{R_1 + R_3} = \frac{22}{2.2 + R_3} = \frac{10}{8}$$

and $R_3 = 15.4\text{k}\Omega$.

2 Question 2., Unipolar 10V. ADC

- A 0-10V. ADC (unipolar) returns a positive integer. There is no sign bit. The binary number

$$\begin{aligned} 111111111 &= 2^9 + 2^8 + 2^7 + 2^6 + 2^5 + 2^4 + 2^3 + 2^2 + 2^1 + 2^0 \\ &= 512 + 256 + 128 + 64 + 32 + 16 + 8 + 4 + 2 + 1 = 1023. \end{aligned}$$

On the other hand one may simply say that this is $2^{10} - 1 = 1023$.

- If a linear instrument, of which a strain gauge bridge is a fair approximation, produces a full count of 1023, representing 10V., at $\epsilon = 0.1\% = 0.001$ then at $\epsilon = 0.00075$ we get

$$\frac{0.00075}{0.001} 10\text{V.} = 7.5\text{V.}$$

and $0.75(1023) = 767.25$ that gets rounded down to a count of 767. Encoded in 10-bits this is

$$\begin{aligned} 1011111111 &= 2^9 + 0(2^8) + 2^7 + 2^6 + 2^5 + 2^4 + 2^3 + 2^2 + 2^1 + 2^0 \\ &= 512 + 0 + 128 + 64 + 32 + 16 + 8 + 4 + 2 + 1 = 767 \end{aligned}$$

3 Question 3., Four (Active) Arm Strain Gauge Bridge

Since the higher (+) voltage is above and the unstrained resistance is 300Ω, $R_1 = R_4 = R - \Delta R$ and $R_2 = R_3 = R + \Delta R$. From

$$\frac{R_2}{R_1 + R_2} V_s = V_{12} \quad \text{and} \quad \frac{R_4}{R_3 + R_4} V_s = V_{34}$$

one may take the difference $V_{12} - V_{34} = 8\text{mV.}$ and solve for ΔR, given $V_s = 10\text{V.}$

$$8\text{mV.} = \frac{300 + \Delta R}{600} 10 - \frac{300 - \Delta R}{600} 10$$

So $\Delta R = 0.24\Omega$ thus

$$R_1 = R_4 = 299.76\Omega \quad \text{and} \quad R_2 = R_3 = 300.24\Omega$$

Don't forget to put up-arrows on $R_2 \uparrow$ and $R_3 \uparrow$ and down-arrows on $R_1 \downarrow$ and $R_4 \downarrow$.

(FD1)mltSol7A3.tex

MECH 261/262
Measurement Lab (& Statistics)

October 31, 2007

Mid-Term Test 07-10-31

1 Question 4., Load Cell Linear Fit

- The purpose here is to evaluate

$$a = \frac{n\sum x_i y_i - \sum x_i \sum y_i}{n\sum x_i^2 - (\sum x_i)^2}, \quad b = \frac{\sum y_i - a\sum x_i}{n}$$

  Using the following table

-

	x_i		y_i		$x_i y_i$		x_i^2
	20		1.7		34		400
	60		5.8		348		3600
	100		7.9		790		10000
$\sum x_i =$	180	$\sum y_i =$	15.4	$\sum x_i y_i =$	1172	$\sum x_i^2 =$	14000

- Therefore, with $n = 3$,

$$a = \frac{3 \times 1172 - 180 \times 15.4}{3 \times 14000 - 180^2} = 0.0775, \quad b = \frac{15.4 - 0.0775 \times 180}{3} = 0.483_3$$

- The static sensitivity is just the slope, a, with the appropriate units of output/input or 0.0775mV/kg.

2 Question 5., Root Mean Square of Parabolic Wave Form

The function $y = 5 - \frac{5}{4}x^2$ describes the first quarter wave. Therefore we need to integrate the square of this from $x = 0$ to $x = 2$, take the square-root and divide by the interval $0 \to 2$.

$$\int_0^2 \left(5 - \frac{5}{4}x^2\right)^2 dx = 25x + \frac{5}{16}x^5 - \frac{25}{6}x^3\Big]_0^2 = \frac{80}{3}$$

Taking the square-root and dividing by 2 produces the RMS value of this wave form amplitude.

$$\sqrt{\frac{80}{5}/2} = \frac{2\sqrt{30}}{3} = 3.65_1$$

3 Question 6., First Order Thermometer Response

From

$$\frac{y - y_i}{y_e - y_i} = 1 - e^{-t/\tau}$$

we use $y = 39.0$C because the precision, ± 0.5C, of the thermometer is such that when it reaches within 0.5C of the feverish patient's temperature it will have, for all intents and purposes, reached stable, constant reading. Of course $t_e = 39.5$C and $t_i = 20$C while $\tau = 4$s. Substituting

$$\frac{39.0 - 20}{39.5 - 20} = 1 - e^{(-t/4)} \quad \text{so} \quad -\frac{t}{4} = \log_e \frac{1}{38} \quad \text{therefore} \quad t = 14.55\text{s}.$$

(FD1)mltSol7A5.tex

MECH 262
(Measurement Lab &) Statistics

November 2, 2007

Mid-Term Test 07-11-02

1 Question 7., Bins and Distributions

The list of given numbers can be sorted as follows.

1.97			7.90	
1.74			7.40	
0.74			7.31	
0.66		5.56	7.25	
0.46		5.49	7.08	
0.32		5.30	6.67	
0.31	3.05	4.81	6.29	8.41

They fall into the following bins.

$$| \, 0 \leq \cdots < 2 \, | \, 2 \leq \cdots < 4 \, | \, 4 \leq \cdots < 6 \, | \, 6 \leq \cdots < 8 \, | \, 8 \leq \cdots < 10 \, |$$

2 Question 8., Plywood and Poisson or Binomial

2.1 Try Poisson

This is a Poisson's distribution problem with mean $\lambda = \frac{1}{10} = 0.1$. We wish to buy enough sheets of plywood so that our chance of getting 10 "clear" ones is 95% or better.

- The probability of getting exactly 0 knotty sheets if we buy only 10 is

  $$P(x) = \frac{e^{-\lambda}\lambda^x}{x!} = \frac{e^{-0.1}\lambda^0}{0!} = 0.9048374180$$

  ...not quite good enough.

- If we buy 11 sheets, we can tolerate 0 or 1 defective ones and still have 10 or more good ones.

  $$\frac{e^{-0.1}\lambda^0}{0!} + \frac{e^{-0.1}\lambda^1}{1!} = 0.9048374180 + 0.09048374180 = 0.995321159$$

  or about a 0.47% probability of 2 bad sheets in 10.

- Well, that expresses the probability of getting 9 good sheets out of 10. If we buy 11 sheets and 10% are bad we have 1.1 bad sheets. Never mind the fraction of a sheet. This is statistics so λ becomes 0.11. What's the probability of getting *2 or more* bad sheets in 11?

$$1 - \left(\frac{e^{-0.11}\lambda^0}{0!} + \frac{e^{-0.11}\lambda^1}{1!} \right) = 0.0056241098$$

  If we buy 11 sheets our chances of having 10 good ones is about 0.56%. As one might expect, getting 2 bad sheets in 11 is slightly greater than getting 2 bad in 10

2.2 Try Binomial

To buy 10 good sheets with a 0.1 probability of getting a bad one every time we pick is expressed by the probability of exactly 1 "bad egg" in the 10 we buy.

$$\text{10 good in 10} = {}_{10}C_0(0.1)^0(0.9)^{10} = 0.3486784401$$

We're playing "Russian roulette" with 4 of 6 chambers loaded. Let's try 11 sheets.

$$\text{10 good in 11} = {}_{11}C_0(0.1)^0(0.9)^{11} + {}_{11}C_1(0.1)^1(0.9)^{10} = 0.6971568802$$

Better but still way short of the of the 5% risk of getting fewer than 10 good sheets that we decided to tolerate. Now for 12.

$$\text{10 good in 12} = {}_{12}C_0(0.1)^0(0.9)^{12} + {}_{12}C_1(0.1)^1(0.9)^{11} + {}_{12}C_2(0.1)^2(0.9)^{10} = 0.8891300223$$

We're getting there. 13 sheets should do it.

$$\begin{aligned} \text{10 good in 13} &= {}_{13}C_0(0.1)^0(0.9)^{13} + {}_{13}C_1(0.1)^1(0.9)^{12} \\ &+ {}_{13}C_2(0.1)^2(0.9)^{11} + {}_{13}C_3(0.1)^3(0.9)^{10} = 0.9658382791 \end{aligned}$$

That did it. If we buy 13 sheets our risk is down to about 3.4%.

3 Question 9., Junk Food and Bayes

This one is easy. Below appears the amount that should be allotted to each age group. The first represent adult targeted advertising, the second is aimed at teenagers and the third towards kids.

$$1000000 \frac{0.6 \times 0.5}{(0.6 \times 0.5) + (0.4 \times 0.8) + (0.3 \times 0.6)} = \$375000$$

$$1000000 \frac{0.4 \times 0.8}{(0.6 \times 0.5) + (0.4 \times 0.8) + (0.3 \times 0.6)} = \$400000$$

$$1000000 \frac{0.3 \times 0.6}{(0.6 \times 0.5) + (0.4 \times 0.8) + (0.3 \times 0.6)} = \$225000$$

(FD1)mstSol7Bb.tex

1. Given the bridge circuit Fig. 1, find the total current that must be supplied by the power supply. (50/3)mA What is the reading of the millivoltmeter? (5/3)mV 2. Which of the applications illustrated in Fig. 2 might produce the state of the bridge in Fig. 1? A,B not C The state of strain corresponds, approximately, to what fraction of full scale? 1/3

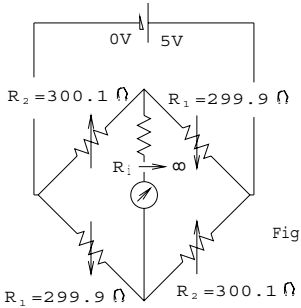

Fig. 1

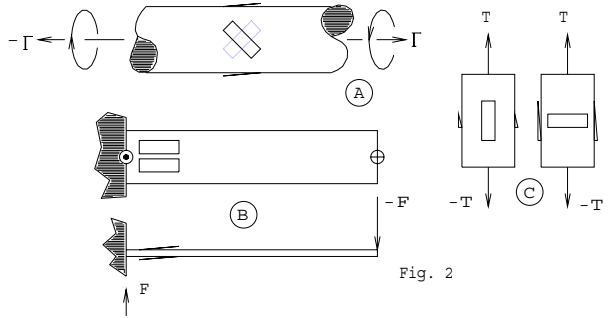

Fig. 2

3. If R_i =10kΩ what is the reading on the millivoltmeter? 1.618 mV
Is this reading too high or too low? low
By about what percent? 2.91 %

Final Exam 07-04-25
Name:- key
Student Number:-
(circle one) MECH 261 262

(FD1)MLX74yA

4. A two-wire platinum RTD bridge has v_s =5V, R_1 =R_2 =R_4 =100 Ω. Each of the two lead wires contribute R_{leadA} =R_{leadB} =0.1Ω. When the sensing element is immersed in boiling water at 100C, estimate the temperature measurement error incurred if one applies Eq. (9.11), p.283, literally. +0.52 C

What's v_o in this case? -411.1m V 139.16 -vs- 139.36Ω

100C -vs- 100.52C

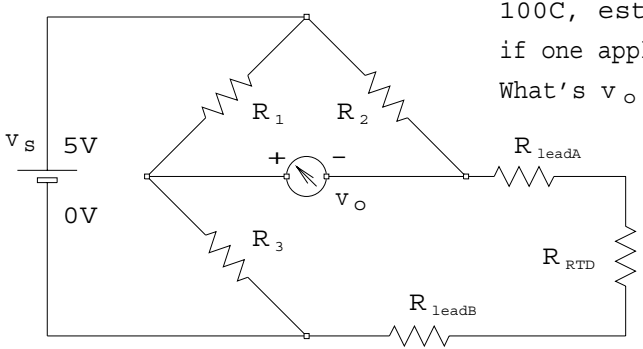

5. A type J thermocouple produces a measured output of 22.000mV with a reference junction assumed to be at 0C. Later, it's found that it was at 4C. What's the true hot junction temperature? 406.48 C This is 3.69 C above ▤ below ☐ the one originally recorded.

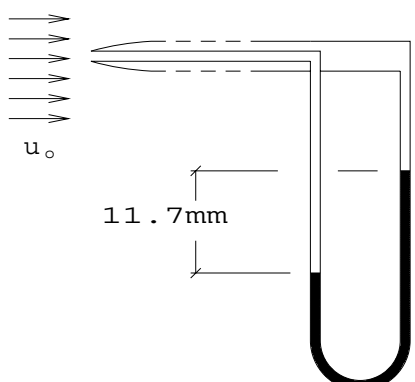

6. A U-tube manometer filled with alcohol (SpG=0.8) is connected to a Pitot-static tube that "looks into" a free stream wind velocity u_o in an air atmosphere at 100kPa and 20C. What is the wind velocity? 12.42 m/s

Final Exam 07-04-25

Name:- key

Student Number:- _____

(circle one) MECH 261 262

(FD1)MLX74yB

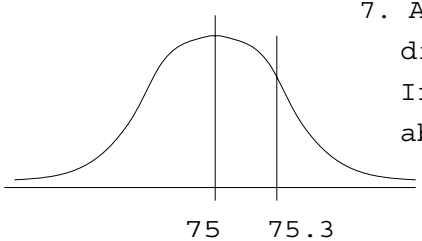

7. Automotive pistons are manufactured and found to have a mean diameter of 75mm and a standard deviation of ±0.13mm. If this product has an acceptable diameter range of ±0.1mm about the mean, how many acceptable pistons might be expected in a lot of 100000? 55880 If oversize pistons for rebuilt engines are nominally 75.3mm in diameter and may also vary ±0.1mm, how many of these may be recovered from this same lot? 6110

8. A wholesaler buys an initial quantity of 50 of these pistons whose manufacturer claims to be of average diameter 75mm. The client decides to continue using this supplier if it may be concluded, with a confidence level of 9 times out of 10, that in the long run the mean diameter with prove not to differ from that claimed. Between what diameter limits 74.9698 mm $\leq x \leq$ 75.0302 mm should the measured diameter limits be in order to continue buying? Use the population standard deviation as claimed above.

Final Exam 07-04-25

Name:- key

Student Number:- _____

(FD1)STX74yC

9. A 5-card "flush" means all 5 cards are of the same "suite", i.e., all hearts, all clubs, all diamonds or all spades. The denomination does not matter. What is the probability of drawing 5 cards in a row, all from the same suite of (initially) 13 cards, from an initially complete deck of 52? 11880/5997600=0.1980792%

30720/5997600=0.5122048%

What is the probability of drawing a 5-card straight? _____ In this case the the sequence can contain all of the suits but after the 5th card is drawn the player must have a run, e.g., 7H,5C,9S,6D,8C. Furthermore "wrap-around" is permitted, e.g., K,A,2,3,4 is O.K. The diagram below, followed by the one on the next page, may help.

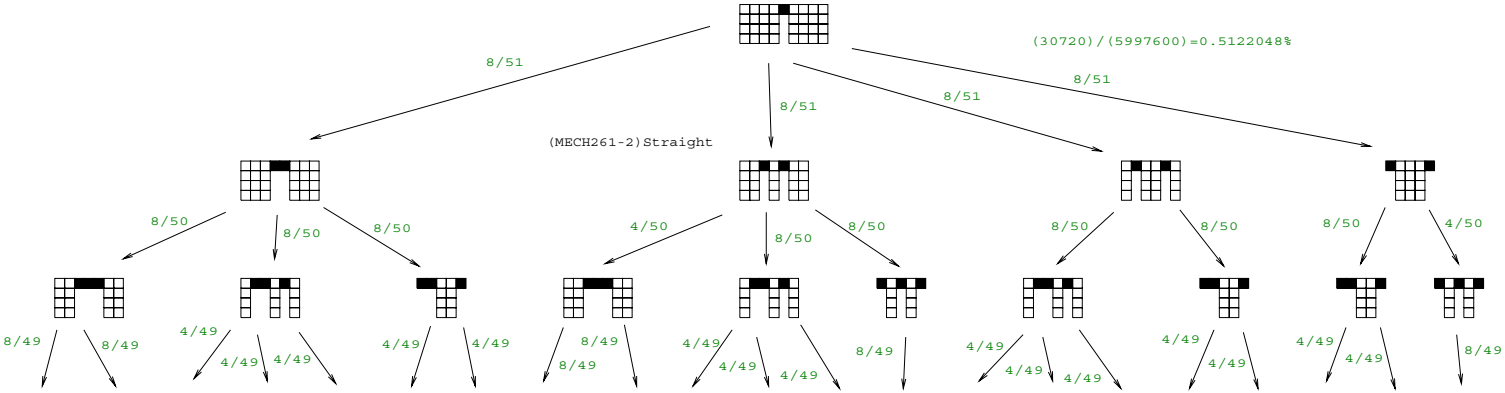

Final Exam 07-04-25

Name:- key

Student Number:- _____

(FD1)STX74yD0

8/48 4/48 8/48 4/48 4/48 4/48 4/48 8/48 4/48 8/48 4/48 4/48 4/48 8/48 4/48 4/48 4/48 4/48 4/48 4/48 4/48

Final Exam 07-04-25

Name:- key

Student Number:- _____

(FD1)STX74yD1

2007 Measurement Final Answers and Solutions

(FD1)FXW07Sol82l.tex

February 12, 2008

1 Problem 1.

a) Total bridge resistance when $R_i \to \infty$ is, by inspection, 300Ω. Therefore

$$I = \frac{E}{R} = \frac{5000\text{mV}}{300\Omega} = \frac{50}{3}\text{mA}$$

b) Designate V_1 the voltage between R_1 and R_2 and V_2 that between R_3 and R_4.

$$V_1 = \frac{R_2}{R_1 + R_2} V_s = \frac{300.1}{600} 5 = 2.500833\text{V}$$

$$V_2 = \frac{R_4}{R_3 + R_4} V_s = \frac{299.9}{600} 5 = 2.499167\text{V}$$

Therefore millivoltmeter reads 1.667mV.

2 Problem 2.

a) Since the gauge pairs are loaded symmetrically, *i.e.*, $\delta R = \pm 0.1\Omega$, the pairs must be in tension/compression of identical magnitude like on the torque cell (A) or the cantilever (B). There are two "Poisson" gauges on (C) that would sustain, nominally, only 30% of the strain sustained by the two "direct" (tensile/compressive) gauges. So the answer is (A), (B), not (C).
b) $\delta R = 0.1\Omega$ corresponds to about 1/3 of nominal, maximum strain $1000\mu\epsilon$ at an assumed gauge factor of 1 (unity). So 1/3 is the fraction of full scale.

3 Problem 3.

In the following i_1, i_2, i_3, i_4, i_i are currents flowing through the resistors with the corresponding subscripts. $V_s = 5\text{V}$ and V_1 and V_2 are the respective voltages between $R_1 = 299.9\Omega$ and $R_2 = 300.1\Omega$ and between $R_3 = 300.1\Omega$ and $R_4 = 299.9\Omega$. Note that here $R_i = 10k\Omega$. Write the following seven linearly independent equations.

$$5 - V_1 - 299.9 i_1 = 0, \;\; V_1 - 300.1 i_2 = 0, \;\; V_1 - V_2 - 10000 i_i = 0, \;\; 5 - V_2 - 300.1 i_3 = 0$$

$$V_2 - 299.9 i_4 = 0, \;\; i_1 - i_2 - i_i = 0, \;\; i_4 - i_3 - i_i = 0$$

The complete solution gives

$$i_1 = 0.008333414266, \;\; i_2 = i_3 = 0.008333252454, \;\; i_4 = 0.008333414266, \;\; i_i = 0.1618122983 \times 10^{-6}$$

All these currents are in Ampères and

$$V_1 = 2.500809061, \;\; V_2 = 2.499190939$$

in Volts. The difference is $V_1 - V_2 = 1.618122\text{mV}$. Recall from **1 b)**, above, with $R_i \to \infty$, $V_1 - V_2 = 1.666667\text{mV}$, a difference of 0.048544mV that corresponds to a reduction in signal (sensitivity) of about 2.9%.

4 Problem 4.

Looking up R_{RTD} in Table 9.3, p.282 under 100C one notes 139.16Ω but the bridge is completed with

$$R_3 = R_{Lead(A)} + R_{RTD} + R_{Lead(B)} = 0.1 + 139.16 + 0.1 = 139.36\Omega$$

An R_{RTD} reading of 139.36Ω produces

$$100 + 10\frac{139.36 - 139.16}{143.01 - 139.16} = 100 + 10\frac{0.2}{3.85} = 100.52\text{C}$$

which is 0.52C too high. v_o can be found as

$$R_{RTD} = R_2\frac{v_s - 2v_o}{v_s + 2v_o}$$

or

$$139.36 = 100\frac{5 - 2v_o}{5 + 2v_o} \rightarrow v_o = -411.096\text{mV}$$

5 Problem 5.

The apparent temperature for a Type J (iron/constantan) thermocouple with an assumed reference junction temperature of 0C, that is actually at 4C, can be obtained by interpolating directly from Table 9.2, p.277.

$$400 + 50\frac{22 - 21.846}{24.607 - 21.846} = 402.79\text{C}$$

The output of 22mV would be greater had the reference junction been at 0C.

$$22 + \frac{4}{2}1.019 = 22.203_8\text{mV}$$

Therefore the actual temperature was

$$400 + 50\frac{22.203_8 - 21.846}{24.607 - 21.846} = 406.48\text{C}$$

or 3.69C above that originally assumed.

6 Problem 6.

The Pitot tube measures impact (velocity) pressure of a free stream directly by stagnating the flow into its opening that faces the stream.

$$\rho_{alcohol}gh = \frac{\rho_{air}V^2}{2}$$

Since the manometric fluid is alcohol with specific gravity 0.8 the left hand side of the energy equation that represents specific potential energy is

$$\rho_{alcohol}gh = 0.8 \times 1000\frac{\text{kg}}{\text{m}^3} \times 9.81\frac{\text{N}}{\text{kg}} \times \frac{11.7}{1000}\text{m} = 91.8216\frac{\text{N}}{\text{m}^2}(\text{Pa})$$

Air density is calculated with the perfect gas law.

$$\rho_{air} = \frac{P}{RT}, \quad P = 100000\text{Pa}, \quad T = 20 + 273 = 293\text{K}$$

Since I only recall

$$R_{air} = 53.3\frac{\text{ft}\#^{\text{f}}}{\#^{\text{m}\circ}\text{R}}$$

we need the following multiplier

$$\frac{12''/\text{ft}}{39.37''/\text{m}}\frac{9.81\text{N/kg}^{\text{f}}}{2.2\#^{\text{f}}/\text{kg}^{\text{f}}}2.2\#^{\text{m}}/\text{kg}^{\text{m}}\frac{9^\circ\text{R}}{5\text{K}} = 5.382169164$$

to convert $R = 286.9\text{J/kgK}$.

$$\rho_{air} = \frac{100000}{286.9 \times 293} = 1.1897\text{kg/m}^3$$

$$V^2 = \frac{91.8216 \times 2}{1.1897} = 154.357 \rightarrow V = 12.42\text{m/s}$$

7 Problem 7.

a) Refer to the Gaussian normal distribution plotted to the left of the question. Means of standard 75mm and oversize 75.3mm piston diameters are shown. Augment the diagram by indicating a band ±0.1mm on either side of these two means, *i.e.*, at 74.9mm, 75.1mm, for the standard pistons and 75.2mm and 75.4mm for the oversize ones. Using Table 6.3, p.136 and computing the standardized variable z for the 75.1mm size limit first as

$$z = \frac{75.1 - 75}{0.13} \approx 0.77 \rightarrow 0.2794$$

where 0.13mm is the given population standard deviation σ. This shows that half of the area under the curve from 75 → 75.1mm is 27.9%. Since the tolerance is bilaterally symmetric one expects $2 \times 0.2794 \rightarrow 55.88\%$ of the production lot pistons are acceptable as "standard". This is about 55880 out of the 100000 total batch of pistons.
b) The band comprising acceptable oversize pistons is obtained by subtracting the integral under the standardized curve from 75 to 75.2mm from that from 75 to 75.4mm.

$$\frac{75.4 - 76}{0.13} \approx 3.08 \rightarrow 0.4990$$

$$\frac{75.2 - 75}{0.13} \approx 1.54 \rightarrow 0.4382$$

This represents about 6.08% or 6080 pistons.

8 Problem 8.

Use

$$\sigma_{\bar{x}} = \frac{\sigma}{\sqrt{n}}, \quad z = \frac{\bar{x} - \mu}{\sigma_{\bar{x}}}$$

to get

$$\pm\|\bar{x}| - |\mu|\| = \frac{z\sigma}{\sqrt{n}} = 1.645\frac{0.13}{50} \rightarrow \pm 0.0302\text{mm}$$

So the sample lot of piston diameters should fall between

$$74.969_8\text{mm} \leq \bar{x} \leq 75.030_2\text{mm}$$

Note that 1.645 is 45% of the area under the z-bell curve, *i.e.*, half of 90%. The sample size was $n = 50$ pistons and $\sigma = 0.13$mm from **Problem 7**.

9 Problem 9.

In drawing five card poker hands from a deck of 52, without replacement, one obtains multiple paths of probabilities of success at each stage that must be added as numerator products of the stages. The denominator is just the product $51 \times 50 \times 49 \times 48 = 5997600$. The first card doesn't matter because the required pattern can be filled in any sequence. It supplies a multiplier of 52 to *both* the numerator and the denominator. The flush is easy because once the suite -clubs, hearts, diamonds or clubs- has been established by the first card dealt, the probability of repeating it becomes

$$\frac{12}{51} \times \frac{11}{50} \times \frac{10}{49} \times \frac{9}{48} = \frac{11880}{5997600} \approx 0.1980792\%$$

This serves as a nice "warm-up" for the straight that makes use of a chequer-board tree to illustrate the problem. It shows the ways in which the straight can be "filled" at any intermediate stage as one proceeds from root to leaf and has the possibility of success by obtaining any one of four cards in any one of the open columns, before proceeding to the next stage (card draw). For example the left-most path contributes $8^4 = 4096$ to the numerators. All 21 paths yield

$$4096 + 2048 + 2048 + 1024 + 1024 + 1024 + 1024 + 2048 + 1024 + 2048 + 1024 + 1024$$

$$+2048 + 2048 + 1024 + 1024 + 1024 + 1024 + 1024 + 1024 + 1024 = 30720$$

With the same denominator, one obtains

$$\frac{30720}{5997600} \approx 0.5122048\%$$

So it is about two-and-a-half times easier to get an arbitrary straight than an arbitrary flush.

S,H,D,C

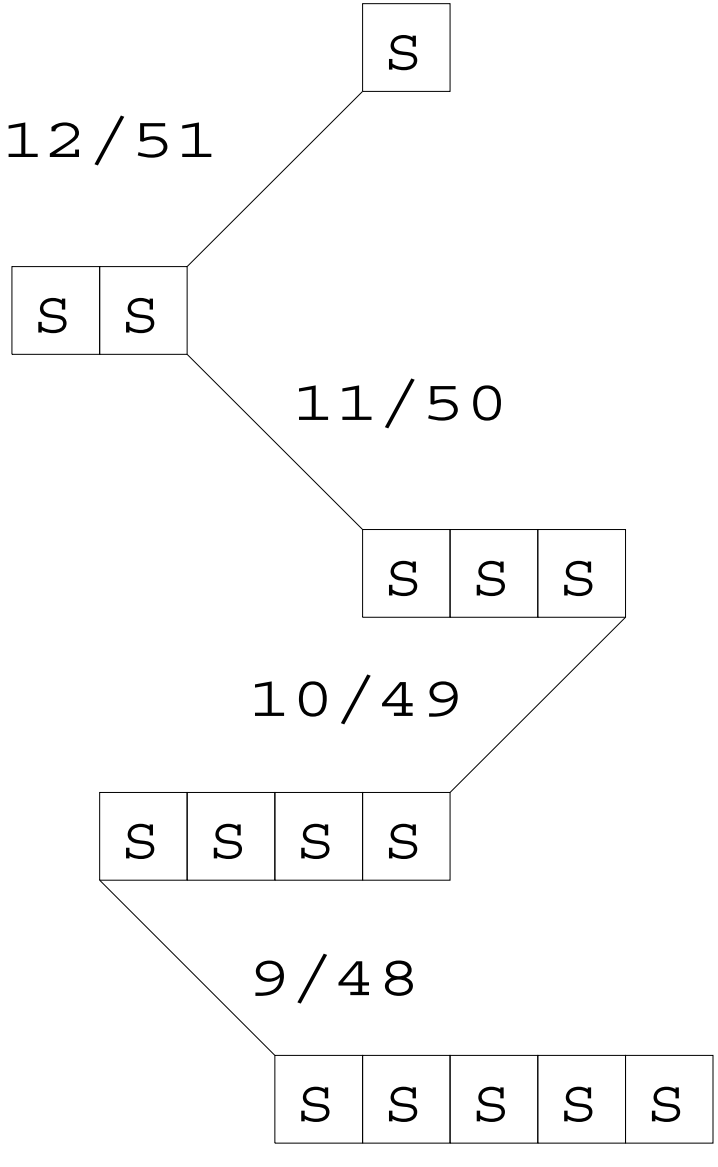

5-card flush

5CFl792

$$p=\frac{12\times11\times10\times9}{51\times50\times49\times48}$$

$=33/16660$

about 0.198%

<1 chance in 500

1. A cycle of a peculiar 3 harmonic wave form is shown below. What is the RMS voltage? $(2\sqrt{6})/3=1.633V$

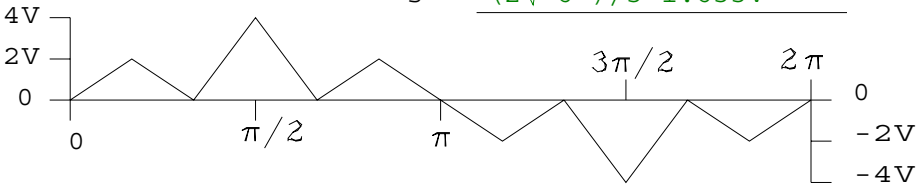

The waveform consist of two half-cycles. Each contaning three isosceles triangular saw-tooth forms spanning 1/6 cycle. Two have peak amplitude of 2V, one of 4V.

2. Do 4219-2146=2073 in 2s complement binary arithmetic. Express the result as a) A 16 bit binary number and b) As a string of 4 hexadecimal digits.

4219	0	0	0	1	0	0	0	0	0	1	1	1	1	0	1	1
+																
-2146	1	1	1	1	0	1	1	1	1	0	0	1	1	1	1	0
=																
2073	0	0	0	0	1	0	0	0	0	0	0	1	1	0	0	1
Hex	0				8				1				9			

3. Given the Gray coded 12-bit number below, express it as a binary integer. What is that in decimal? 608

Hint:- study the logic block below or the section on arithmetic on the website.

g_6											g_0
0	0	1	1	0	1	0	1	0	0	0	0
0	0	1	0	0	1	1	0	0	0	0	0
b_{11}											b_0

A	B	C
0	0	0
0	1	1
1	0	1
1	1	0

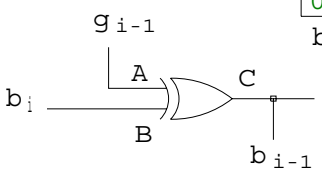

Midterm Test 07-02-27, 40min.

Name:- key

Student Number:- _____

(circle one) MECH 261 262

(FD1)MLT721A

1. Make a 10:1 voltage divider by choosing R_1 and R_2 so that the meter reads exactly 500mV when the source voltage is 5V. The circuit consisting of R_1, R_2 and R_i must have an effective resistance of $10000R_o$.

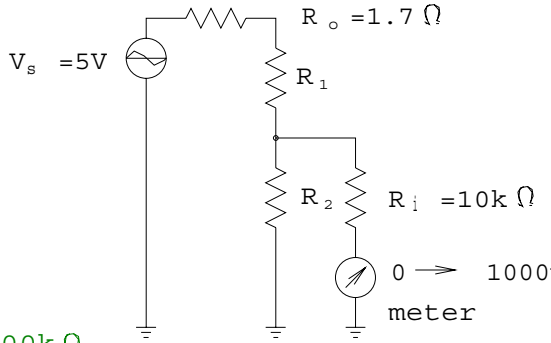

R_1 = 15299.83 Ω

R_2 = 2048.439546 Ω

2. An inverting 741 Op.Amp. has a gain of G=100 and an input impedance $Z_i = 1000\,\Omega$. Find f_c, R_1 and R_2.

f_c = 9.90kHz R_1 = 1000 Ω R_2 = 100k Ω

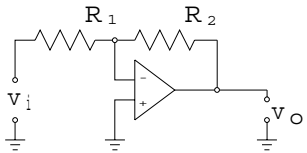

3. A lowpass amplifier with corner frequency f_c of 1kHz produces an output amplitude of 0.1V with an input sine wave signal of 3kHz. What is the output amplitude voltage for a 20kHz sine wave signal input with the same amplitude as the 3kHz one? Rolloff is 24dB per octave.

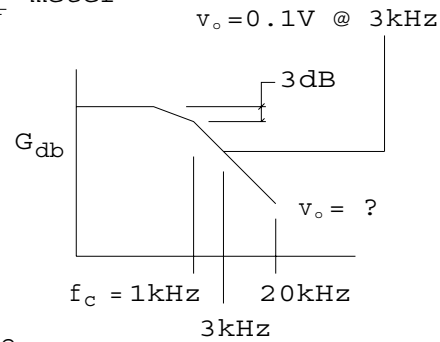

v_o @20kHz= 52 μV

Midterm Test 07-02-28, 40min.

Name:- key

Student Number:-

(circle one) MECH 261 262

(FD1)MLT722B

1. Sometimes we need a linear fit that minimizes the sum of squares of y-deviations subject to the line passing throgh the origin.
Write the relations for the coefficients in the equation y=ax+b.

$$a = \frac{\sum x_i y_i}{\sum x_i^2} \quad i=1 \ldots n \qquad b = 0$$

For the data at right

a= 5/4

b= 0

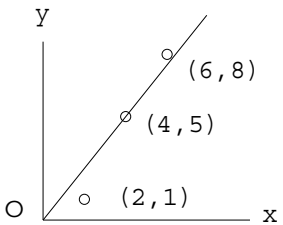

2. 180 seats are sold for an aircraft with 175 seats. If 1 in 20 passangers are on average "no shows" what is the most likely number of empty seats that will remain? 4
What is the probability of that occuring? 13.5% Hint:- 180Cr

3. Tellers in a bank must, on average, serve 20 customers per hour. What is the probability that a) Exactly 25 customers arrive in a given hour? 4.46%
b) There will be less than 10 customers arriving during a given hour? 0.50%
Hint:- Poisson; did you try 6.29?

Midterm Test 07-03-02 ,40min.

Name:- key

Student Number:-

MECH 262

(FD1)STT73bC

2007 Measurement Midterm Answers and Solutions with *Maple*

(FD1)MT07Sol882.tex

August 28, 2007

The two exam sheets (for Measurement only) with answers follow the solution of question 1 on the 07-02-26 midterm; the one about *root-mean-square voltage*.

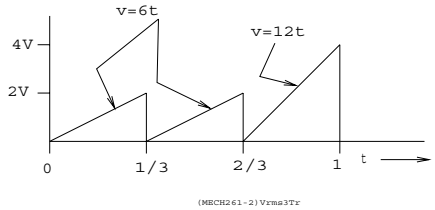

Figure 1: Midterm Test 07-02-26

Consider Fig. 1. The composite waveform shown in the actual question can be reduced to these three elements because if all harmonics of a cyclic wave are represented *in their correct proportional contribution* a simpler problem can be solved to give an equivalent result. Each element spans $\frac{1}{3}$ cycle so we double the contribution of the small triangle and include the larger just once. Don't forget to *square* $v(t)$.

$$V_{rms} = \sqrt{2\int_0^{\frac{1}{3}} (6t)^2 dt + \int_0^{\frac{1}{3}} (12t)^2 dt} = 2\sqrt{\frac{2}{3}}$$

The solutions for questions 2 and 3 on the 07-02-26 midterm are omitted. Binary arithmetic and Gray to binary code conversion are covered adequately in the notes posted on the website.

Turning to the 07-02-28 midterm, the solution to question one is summarized in the following *Maple* worksheet.

```
> restart:
> eq1:=R1+1/(1/R2+1/Ri)-10000*Ro;eq2:=(1/(1/R2+1/Ri))/((Ro+R1+1/(1/R2+1
> /Ri)))-.1;
```

$$eq1 := R1 + \frac{1}{\frac{1}{R2} + \frac{1}{Ri}} - 10000\, Ro$$

$$eq2 := \frac{1}{(\frac{1}{R2} + \frac{1}{Ri}) \left(Ro + R1 + \frac{1}{\frac{1}{R2} + \frac{1}{Ri}} \right)} - 0.1$$

```
> eq3:=subs(Ri=10000,Ro=1.7,eq1);eq4:=subs(Ri=10000,Ro=1.7,eq2);
```

$$eq3 := R1 + \frac{1}{\frac{1}{R2} + \frac{1}{10000}} - 17000.0$$

$$eq4 := \frac{1}{(\frac{1}{R2} + \frac{1}{10000}) \left(1.7 + R1 + \frac{1}{\frac{1}{R2} + \frac{1}{10000}} \right)} - 0.1$$

```
> R2:=solve(eq3,R2);
```

$$R2 := -\frac{10000.\,(R1 - 17000.)}{R1 - 7000.}$$

```
> eq4;
```

$$1/\left((-\frac{0.0001000000000\,(R1-7000.)}{R1-17000.}+\frac{1}{10000})\left(1.7+R1+\frac{1}{-\frac{0.0001000000000\,(R1-7000.)}{R1-17000.}+\frac{1}{10000}}\right)\right)-0.1$$

```
> R1:=solve(eq4);
```

$$R1 := 15299.83000$$

```
> R2;
```

$$2048.439546$$

Problem 1. Ms2Mt722, Measurement MECH 261/262 midterm 07-02-28. 10:1 voltage divider was dealt with above.

Question 2 just requires some reading from the text. On page 47 it says that an inverting Op-Amp has an input impedance of $\approx R_1$. So if $Z_i = 1000\Omega$, $R_1 = 1000\Omega$. To get a gain of $G = 100$ it is noted that for an inverting Op-Amp $G = R_2/R_1$ so $R_2 = 100k\Omega$. Finally we are told

$$f_c = \frac{GBP}{G},\ \ GBP_{non-inv} = 10MHz,\ \ GBP_{inv} = \frac{R_2}{R_1+R_2}$$

so

$$f_c = \frac{100k\Omega}{1k\Omega + 100k\Omega} = 9.90kHz$$

Finally the solution to question 3 on the 07-02-28 midterm is summarized below. Converting decades to octaves requires the ratio $\frac{\log 10}{\log 2}$ as a multiplier.

```
> restart:
> Oct13:=evalf(log(3/1)/log(2));Oct120:=evalf(log(20/1)/log(2));Oct320:
> =evalf(log(20/3)/log(2));
```

$$Oct13 := 1.584962501$$
$$Oct120 := 4.321928095$$
$$Oct320 := 2.736965594$$

```
> Oct120-Oct13;
```

$$2.736965594$$

```
> dB1:=3;dB3:=24*Oct13+dB1;dB20:=24*Oct120+dB1;
```

$$dB1 := 3$$
$$dB3 := 41.03910002$$
$$dB20 := 106.7262743$$

```
> G1:=evalf(10^(dB1/20));
```

$$G1 := 1.412537545$$

```
> G3:=evalf(10^(dB3/20));
```

$$G3 := 112.7080669$$

```
> G20:=evalf(10^(dB20/20));
```

$$G20 := 216927.0523$$

```
> vo3:=.1:vi:=vo3*G3;vo1:=vi/G1;vo20:=vi/G20;
```

$$vi := 11.27080669$$
$$vo1 := 7.979120081$$
$$vo20 := 0.00005195666732$$

Problem 3.16:- A lowpass Butterworth filter has a corner frequency of 1kHz. An input of a 3kHz harmonic sustains an output voltage vo3=0.1V. The filter has a 24bD rolloff in its stopband. Find vo20, the output voltage

for a 20kHz pure sinusoidal input signal with the same amplitude as the 3kHz wave that was attenuated to 0.1V. vi is the input signal amplitude for all waves of the same amplitude and form. vo1 is the output amplitude of the 1kHz signal. (MECH261-2)dBperOctave, 07-02-25.

```
> restart:with(combinat):
```

```
Warning, the protected name Chi has been redefined and unprotected
```

```
> a:=(2*1+4*5+6*8)/(2^2+4^2+6^2);
```

$$a := \frac{5}{4}$$

A least squares linear fit that is forced to go through the origin requires only one degree of freedom, i.e., a, the slope of the line. This is computed as the sum of the products of the point coordinates divided by the sum of the squares of the x-coordinates. This is question 1 on the 2007 MECH 262 midterm test.

```
> numbcomb(180,7)*.05^7*.95^173;
```

$$0.1180760941$$

```
> numbcomb(180,8)*.05^8*.95^172;
```

$$0.1343892387$$

```
> numbcomb(180,9)*.05^9*.95^171;
```

$$0.1351751406$$

```
> numbcomb(180,10)*.05^10*.95^170;
```

$$0.1216576265$$

This is an iterative solution to the "rotten egg" problem to find the most likely (highest probability) number in a binomially distributed sample of 180 "events" with a probability of 1/20. This is a unimodal distribution function, i.e., it has a single peak or maximum. We see this is the probability of 9 "no-shows" at about 13.5%. Sorry, I subtracted 175-(180-9)=2, the wrong answer. It should have been 4 empty seats.This is question 2 on the 2007 MECH 262 midterm test.

```
> P25:=exp(-20)*20^25/25!;evalf(P25);
```

$$P25 := \frac{5120000000000000000000}{236682282155319}\, e^{(-20)}$$

$$0.04458764909$$

```
> P0:=evalf(exp(-20)*20^0/0!);P1:=evalf(exp(-20)*20^1/1!);P2:=evalf(exp
> (-20)*20^2/2!);P3:=evalf(exp(-20)*20^3/3!);P4:=evalf(exp(-20)*20^4/4!)
> ;P5:=evalf(exp(-20)*20^5/5!);P6:=evalf(exp(-20)*20^6/6!);P7:=evalf(exp
> (-20)*20^7/7!);P8:=evalf(exp(-20)*20^8/8!);P9:=evalf(exp(-20)*20^9/9!)
> ;
```

$$P0 := 0.2061153622\,10^{-8}$$
$$P1 := 0.4122307244\,10^{-7}$$
$$P2 := 0.4122307244\,10^{-6}$$
$$P3 := 0.2748204829\,10^{-5}$$
$$P4 := 0.00001374102415$$
$$P5 := 0.00005496409659$$
$$P6 := 0.0001832136553$$
$$P7 := 0.0005234675866$$
$$P8 := 0.001308668966$$
$$P9 := 0.002908153258$$

```
> P0to9:=P0+P1+P2+P3+P4+P5+P6+P7+P8+P9;
```

$$P0to9 := 0.004995412306$$

```
> P10:=evalf(exp(-20)*20^10/10!);
```

$$P10 := 0.005816306518$$

```
> P0to9+P10;
```

0.01081171882

The bank problem is suited to a Poisson distribution model. We get about 4.46% probability that exactly 25 customers will arrive in an hour long period if the average number of arrtivals is 20 per hour. The probability that less than 10 will arrive is computed as the sum of the probability of exactly 0,1,2,3,4,5,6,7,8,9 arrivals. Unfortunately added the probability of exactly 10 arraivals as well to get about 1.08% probability. The answer should have been about 0.5%.(MECH261-2)MStMt73b.mws. Recomputed 07-03-03.

Measurement Question 1.

A 12-bit bi-polar ADC is scaled to measure ±5V-dc

What is its static sensitivity? 0.4094 bits/mV (Value and units stated clearly, please)

Given this instrument, what measurement does the count ...

±	10	9	8	7	6	5	4	3	2	1	0
1	0	0	1	0	1	1	0	0	1	1	1

represent? -4.125V

±	10	9	8	7	6	5	4	3	2	1	0

±	10	9	8	7	6	5	4	3	2	1	0

±	10	9	8	7	6	5	4	3	2	1	0

empty 12-bit registers
to help with your rough work

Final Exam 06-04-21

Name:- key

Student Number:- _____

MECH 261/262

(FD1)MLX64uA

Measurement Questions 2 and 3.

Question 2. If the frequency response of an amplifier is stated as "2dB down at 200Hz" what is the actual magnitude of a voltage signal measured as 5.6V at this frequency?

7.05V

Question 3. An instrument transducer is specified as having an output impedance of 10 Ω. It consists of a themocouple voltage source with an internal impedance of 1.8 Ω. The "black box" transducer model is shown below. What is the value of the unkown impedance Z?

8.2 Ω

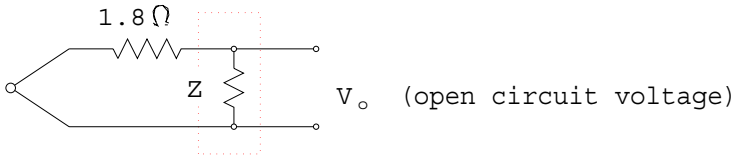

Final Exam 06-04-21

Name:- key

Student Number:-

MECH 261/262

(FD1)MLX64uB

Measurement Question 4.

A thermocouple can be represented as a first order system as regards its time response. A particular example of such an instrument has a time constant of 10s and is subject to a temperature rise of constant rate equal to 10C per minute. What is the time delay between any given instantaneous reading and the time at which it occurred? 10s

What is the error inherent in any instantaneous reading? 10/6=1.6667C

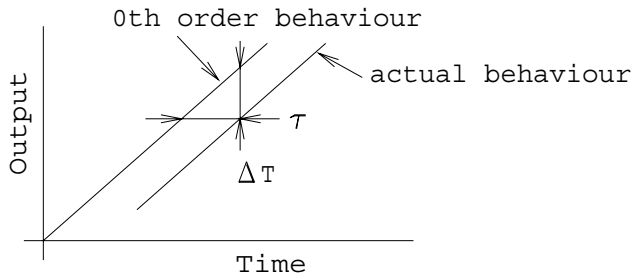

Final Exam 06-04-21

Name:- key

Student Number:-

MECH 261/262

(FD1)MLX64uC

Statistics Question 1.

This is the decision tree for a "full house" probability on drawing 5 cards from (initially) a deck of 52 playing cards such that you get 3 of any kind and 2 of any other kind. Say, 3 Jacks and 2 sevens. Of course a pair of Aces and 3 sixes would be equally valid.

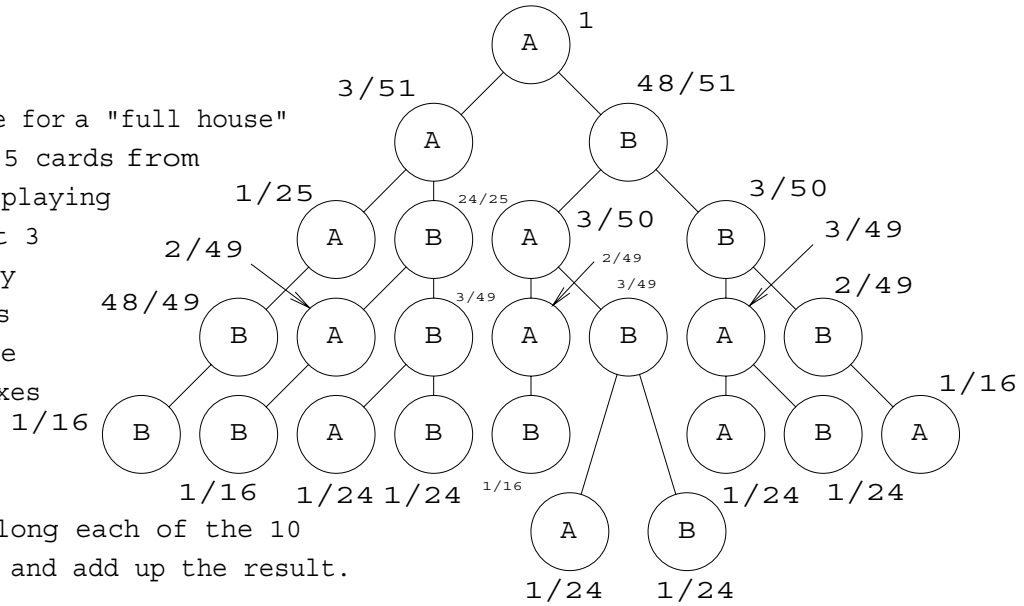

Multiply the numbers along each of the 10 equally likely branches and add up the result.

P= 0.00144057623

Final Exam 06-04-21

Name:- key

Student Number:-

MECH 262

(FD1)STX64uD

Statistics Question 2.

A sample n=100 of eggs have a mean $\bar{x}$=300g measured weight and a standard deviation S=±15g. In a sample of 100 eggs from the same population how many of these might one expect to deviate no more than

±7.5g 38 (estimated number)

±30g 95 (estimated number)

±75g 100 (estimated number)

±1.5g 8 (estimated number)

... from the 300g mean? Assume a normal dstribution of weight about the mean with the same standard deviation.

Final Exam 06-04-21

Name:- key

Student Number:- _____

MECH 262

(FD1)STX64uE

x (kg.) INPUT	y (mV.) OUTPUT
0	-1.5
5	4.34
10	9.52
15	14.64
20	19.20
25	26.60
30	29.55

Statistics Question 3.

The following is data resulting from a loadcell calibration.

A linear calibration y-regression fit yields the relation

$$y=1.0525x-1.166071429$$

Compute the seven y-data deviations from this line.

δ_1 -0.333928571

δ_2 0.243571429

δ_3 0.161071429

δ_4 0.01857143

δ_5 -0.68392857

δ_6 1.45357143

δ_7 -0.85892857

Now compute the mean deviation $\bar{x}$ 0.000000001

and the standard deviation of these deviations from this mean

S 0.7654531026

Based on Thompson's method, pp.149-150 and table 6.8 in Wheeler and Ganji, which, if any, of these deviations qualify as outliers?

$\delta_6 = 1.453 > 1.3097 = \tau_7 S$

Do not confuse $\bar{x}$ with x. In the first instance I'm using standard notation for sample mean. The other just means data on an x/y graph.

Final Exam 06-04-21

Name:- key

Student Number:- _____

MECH 262

(FD1)STX64uF

Statistics Question 4.

Assuming you have digested the circle fitting discussed in the last two lectures, study the attached two pages. Using the coordinates of centroid G and the three eigenvector direction numbers, figure out the circle centre coordinates and radius magnitude.

x_c = 0.939726079

y_c = 0.924164211

r= 1.22539915

G{1:1.25:0.75:3.5}

$$\bar{e} = \begin{bmatrix} -13.89011176 \\ -13.66009144 \\ 7.390510948 \end{bmatrix}$$

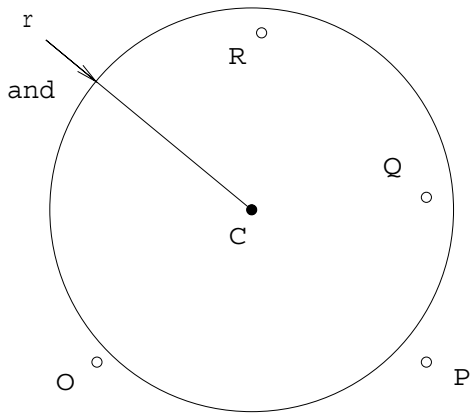

O(0,0)
P(2,0)
Q(2,1)
R(1,2)

C(0.939726079,0.924164211)

r=1.22539915

Final Exam 06-04-21

Name:- key

Student Number:-

MECH 262

(FD1)STX64uG

1. Given a "semi-circular" and a sinusoidal wave form of the same peak amplitide A what is the ratio of their RMS amplitudes (voltage)?

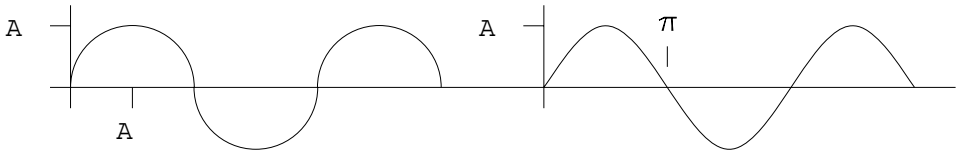

- 1.10 ☐
- 1.15 ☐
- 1.20 ☐
- 1.25 ☐
- 1.30 ☐

(check one)

2. Do (-176)+(-333)=(-509) in 2s complement binary arithmetic. Express the result as a) A 2s complement, 12 bit binary number and b) As a string of 6 hexadecimal digits.

	1	1	1	1	0	1	0	1	0	0	0	0	(-176)
+													
	1	1	1	0	1	0	1	1	0	0	1	1	(-333)
=													
	1	1	1	0	0	0	0	0	0	0	1	1	(-509)
	E			0				3					Hex.

3. Sometimes change in frequency is expressed in decades, increase or decrease by factors of 10 rather than factors of 2 or octaves. How many octaves per decade? 3.322

Express a roll-off of 6dB/octave as 19.932 dB/decade.

Midterm Test 06-02-27, 40min.

Name:- key

Student Number:- _____

(circle one) MECH 261 262

(FD1)MLT621A

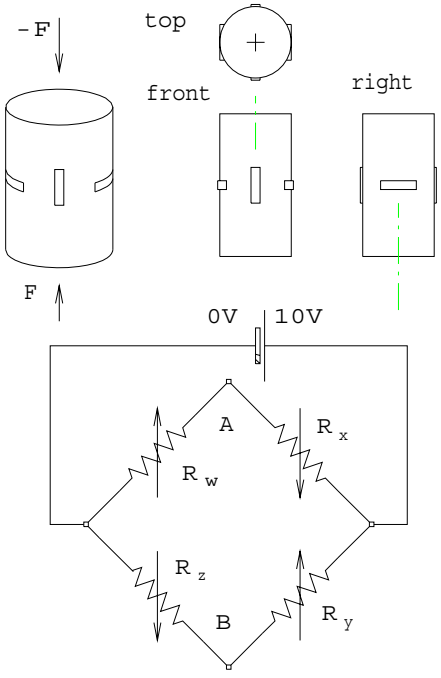

(FD1)MLT63aB

1. A force transducer consists of a 4-arm SR4 (nominal 300ohms each) strain gauge bridge mounted on a solid steel cylinder compression element 10mm dia. and 20mm high. What force F does this element sustain at 1000 micro-strain in the direction shown? 16.26kN

2. If Poisson's ratio for the strain gauges' metal sensing wires is 0.3, what is the gauge factor F_G? 1.6

3. What is the bridge output voltage $V_A V_B$ if the axial compressive strain is 1000 micro-strain and the supply voltage is 10V? 10.406mV

This is to help you get part marks.

R_w 300.144ohms
R_x 299.52ohms
R_y 300.144ohms
R_z 299.144ohms

Midterm Test 06-03-01, 40min.

Name:- key

Student Number:- _____

(circle one) MECH 261 262

1. A probability density function is given by a sine wave function $P(x)=[\sin(x)]/2$ in the interval x=0 to 180deg.

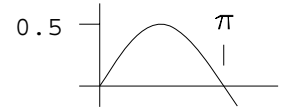

Compute the mean, μ, the variance, v, and the standard deviation, σ.

$90^{\circ} = \pi/2$ $(\pi^2/4)-2=0.4674$ 0.6836673905

2. 180 seats are sold for an aircraft with a 175 passanger capacity. If, on average, 1 passanger in 20 is a "no-show", what is the probability that "overbooking" will occur? I.e., more than 175 passangers show up.

37% (express as %)

3. If a barber can process 5 customers per hour what is the probability that someone will have to wait beyond the one-hour period in which he/she arrived if, on average, the barber processes 40 customers during an 8-hour shift?

38.4% (express as %)

Midterm Test 06-03-03 ,40min.

Name:- key

Student Number:- _____

MECH 262

(FD1)STT63cC

1. Uncertainty analysis:- Given an end loaded cantilever displacement transducer that obeys the relationship $\delta = \frac{2L^3 \varepsilon}{3h(L-C)}$ find the % bilateral tolerance uncertainty

... if L=200mm ± 0.1mm

ε=0.001 ± 0.00001

h=4mm ± 0.01mm

C=20mm ± 0.1mm

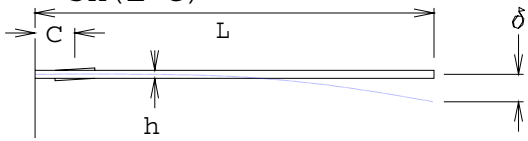

... in δ ...

deflection δ = 7.407mm

% uncertainty = 1.037%

2. A chromel-constantan thermocouple junction is placed in an oven. The reference junction is in a brine-ice bath at an equilibrium tempreature of -3C. If the measured voltage output is exactly 40mV what is the temperature in the oven, according to linear interpolation of the table on p.277?

T= 535.05C

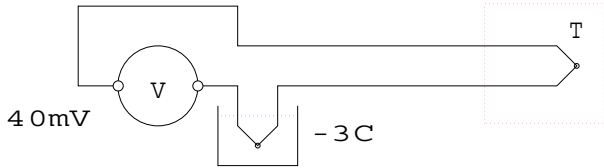

3. Refer to the table, the figure and the equation on the next page. A 100ohm at 0C resistance thermometer behaves according to the table and is connected as shown. R_2 is adjusted to make V_o =0 at 0C. Find V_o at 390C if a) the lead resistances are R_L =0 and b) R_L =2ohms. All three lead resistances are identical, R_L. Express V_o to the nearest microVolt.

a) -0.422049V

b) -0.417226V

Final Exam, MECH 261/262, 05-04-27, 2 hours

Name:- key

Student Number:-

(circle one) MECH 261 262

(FD1)MLX541A

4. An 8-bit digital displacement transducer returns the reading shown below. It is coded to represent a straight binary (unsigned) integer but it is Gray coded and must be decoded using the digital circuit shown. Put the readable binary result in the second register.

7	6	5	4	3	2	1	0
1	0	1	0	1	0	1	0

1	1	0	0	1	1	0	0

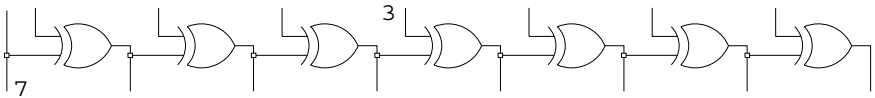

5. Air of density ρ =1.2kg/m^3 flows at velocity V=20m/s in a duct of internal diameter D=0.2m. Find the Reynolds number Re. I looked for air viscosiy but all I could find was stated in old Imperial units, i.e., at room temperature μ= 0.038x10^{-5} slugs/(ft-sec) ! Note that a slug is 32.16 pounds, there are 2.2 pounds/kg, 25.4mm/inch and 12 in/ft.

Re= 2.6x10^5 Re= $\rho VD/\mu$

6. You've been hired by MTC to track down possible leakage from their 750V(DC) Metro "3rd rail". All you've got are 22kOhm resistors and a crappy 10k Ohm input impedence, 10V full scale meter. Using the circuit you designed (below), can you detect if the supply drops to 700V if you can read the scale to ±0.1V?

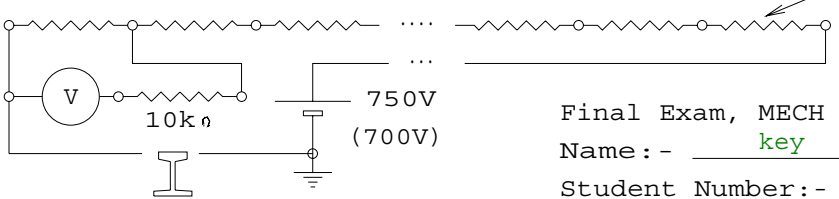

100x22kOhm resistors

V@750V 2.36 yes ☒

V@700V 2.20 no ☐

Final Exam, MECH 261/262, 05-04-27, 2 hours

Name:- key

Student Number:- _____

(circle one) MECH 261 262

(FD1)MLX541B

7. Given the distribution function f(x), find x and f(x) at the mean, mode and median values. Make appropriately precise estimates where analysis bogs down.

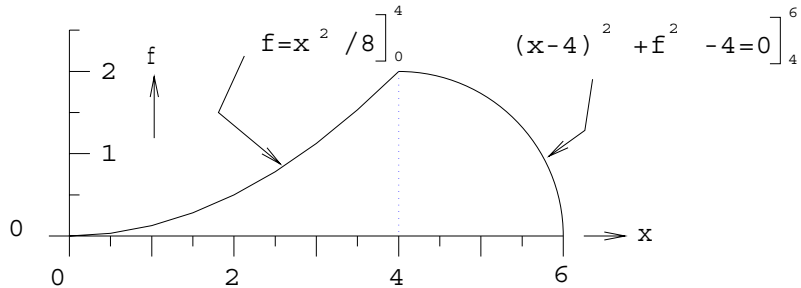

	x	f
mean {	2.7821	0.96804
	5.75011	
median	4.1188	1.9965
mode	4	2

8. A sample of 10 eggs has an average weight of 71.5g with standard deviation of 0.5g. Examine a claim of 71g average weight for the population at a LoC of 99%.

Is 71.5 - 0.542 < or > 71g? Is 71.5 - 0.377 < or > 71g?

What about 15 eggs averaging 71.4g with S=0.49g?

9. Running the 15-egg test 13 times reveals an average standard deviation S= 0.483g. Estimate the probable range of the population standard deviation σ at a LoC of 95%.

0.3605g $\leq \sigma \leq$ 0.797g

LoC=Level of Confidence

Final Exam, MECH 262, 05-04-27, 1 hour additional

Name key

Student Number

(FD1)STX541C

1. A cheap 1000ohm input impedence voltmeter is used to measure the terminal voltage of a battery with an internal resistance of 0.5ohm. The reading is 1.4V.
Estimate the reading error in mV. Is it too high or too low? 0.7 mV low

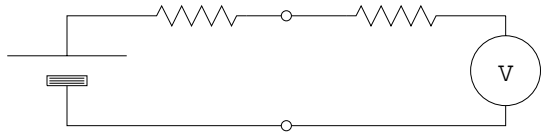

2. Answer the six questions below. These are inverting op. amps. but use output magnitude, ignore sign change.

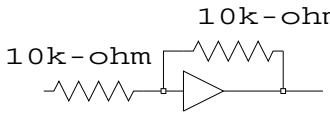

The gain is G= 1
In dB that is 0 dB

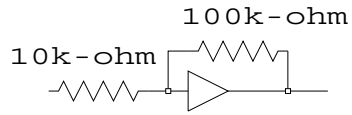

The gain is G= 10
In dB that is +20 dB

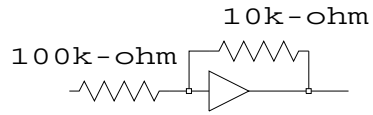

The gain is G= 1/10
In dB that is -20 dB

3. The RMS voltage of the asymmetric sawtooth waveform is 7V. Find the peak voltage.

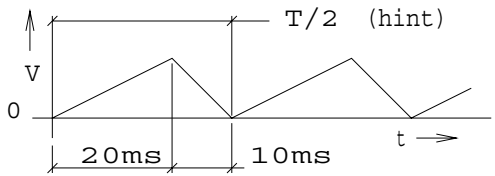

$7\sqrt{3} = 12.124$ V

Midterm Test part 1, 05-02-28, 1 hour
Name:- key
Student Number:-
(circle one) MECH 261 262

(FD1)MLT522A

4. Represent 379_{10} in binary, octal and hexadecimal.

9	8	7	6	5	4	3	2	1	0
0	1	0	1	1	1	1	0	1	1

Octal 573 Hexadecimal 17B

Represent its 2's and 10's complement. Fill all squares with 1 or 0.

11	10	9	8	7	6	5	4	3	2	1	0
1	1	1	0	1	0	0	0	0	1	0	1

2's complement ... 999621 10's complememt

5. Do a linear fit on the four given points, i.e., find a and b in y=ax+b such that $\sum [y_i - (ax_i + b)]^2$ is minimized.

Express a and b as reduced fractions like 3/4, not like 12/16.

a= 24/35

b= 39/35

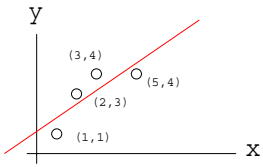

6. Label the gauges on the bridge A,B,C,D where ↑ means tensile and ↓ means compressive. If E=207GPa and $\sigma_{max.}$ =0.207GPa and μ =0.3, compute the measured out-of-balance Signal V in mV. Gauges are 300ohm steel SR4's mounted on a steel block.

V= 2.617485 mV

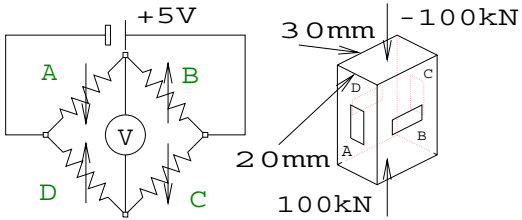

Midterm test part 2, 05-03-02, 1 hour

Name:- key

Student Number:-

(circle one) MECH 261 262 (FD1)MLT52bB

7. In a general poplation of non-smokers lung cancer is the cause of death in 1 out of a 1000 deaths . A random sample of 250 smokers who died reveals 1 lung cancer death. Based on binomial analysis, what is the probability that the frequency of lung cancer death among smokers is no more frequent than among smokers? Express your answer as a decimal fraction p, 0<p<1. p= 0.21296626
Note that these are the sort of data that the upcoming anti-tobacco class-action lawsuits will be concerned with thereby making many lawyers very, very rich.

8. Magna Corp. manufactures a great many automotive pistons of mean diameter 100 mm. The standard deviation is æ 10 microns. Assuming normal Gaussian distribution, what percentage of production can be assigned to "oversize" stock, i.e., to recondition worn engines by reaming out the cylinders to slightly greater diameter and and fitting oversize pistons in the range +15 to +20 microns? 4.4 % to oversize stock

9. Customers arrive at an average rate of 50 per hour. The sole cashier checks out shoppers in exactly 1 minute. What is the probability that during any given one minute interval there are more than 2 customers at the check out? Express the probability as a percentage. 5.234463 % of the time there are more than 2 waiting.

Midterm Test part 3, 05-03-04, 1 hour
Name:- key
Student Number:- _____
MECH 262

(FD1)STT53cC

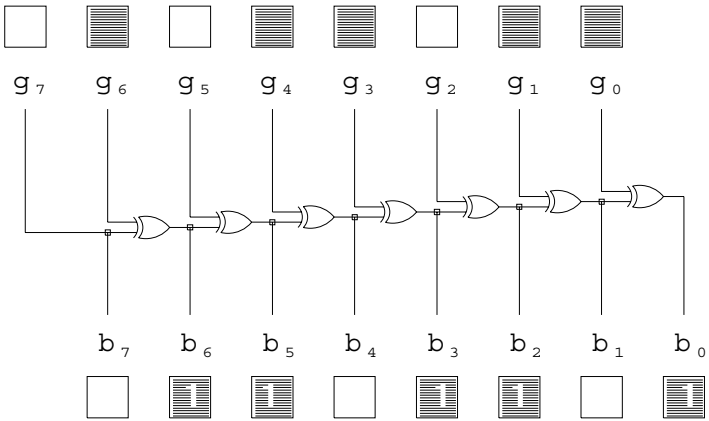

A 0-10v "flash" ADC outputs an 8-bit binary Gray code digital signal. Express the straight binary number output from the Gray-to-binary convertor.

☐ = 0

▤ = 1

This represents the decimal integer 135 109 91 75

☐ ▤ ☐ ☐

▤ = true

☐ = false

that corresponds to 3.569v 5.294v 2.941v 4.275v

☐ ☐ ☐ ▤

Question 1.

Topics 1,2 &6

(FD1)MLX443A

Final Exam 04-04-29, 2hrs. 261, 3hrs. 262

Name:- key

Student Number:- _____

(circle one) MECH 261 262

Using Thévenin's theorem, find the output impedance of a standard four resistor strain gage bridge circuit. All arms contain elements of identical resistance.

What is the current drain on the battery?

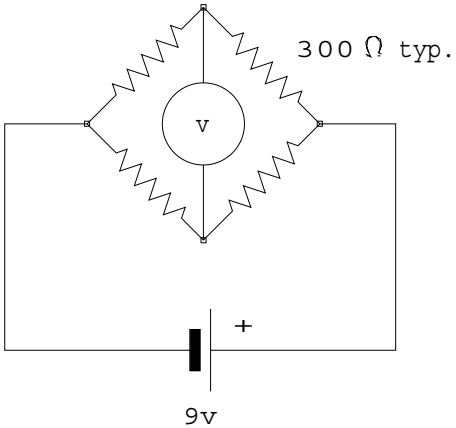

120mA	60mA	40mA	30mA	24mA
☐	☐	☐	▤	☐

20mA	17mA	15mA	7.5mA	none of these
☐	☐	☐	☐	☐

Output impedance	75 Ω	150 Ω	225 Ω	300 Ω	375 Ω	450 Ω	525 Ω	600 Ω	1200 Ω	none of these
	☐	☐	☐	▤	☐	☐	☐	☐	☐	☐

Question 2.
Topics 3 & 5

(FD1)MLX443B

Final Exam 04-04-29, 2hrs. 261, 3hrs. 262

Name:- key

Student Number:- _____

(circle one) MECH 261 262

A photodiode may be used in an absolute or incremental displacement transducer. ▨

A light emitting diode (LED) " " " ▨

A thermocouple is used together with a bridge circuit. ☐

A thermistor may be used in a bridge circuit. ▨

A bimetallic strip may be used as a digital temperature sensor. ▨

A bimetallic strip may be used as an analog temperature sensor. ▨

A strain gage torque/angular displacement transducer may be modelled as a 1st order system. ▨

An advantage of an advanced system like LabView is that analog sensors like thermocouples and strain gages become unnecessary. ☐

A digital to analog convertor may be used in a system to measure voltage. ▨

▨ = true

☐ = false

Question 3.

Topics (miscellaneous)

(FD1)MLX443C

Final Exam 04-04-29, 2hrs. 261, 3hrs. 262

Name:- key

Student Number:- _____

(circle one) MECH 261 262

Montréal is at approximately 45N-75W. Using the satellite position over the Equator and on the plane of Greenwich, the 0-180 degree meridian compute the distance between the satellite and Montréal at this instant.

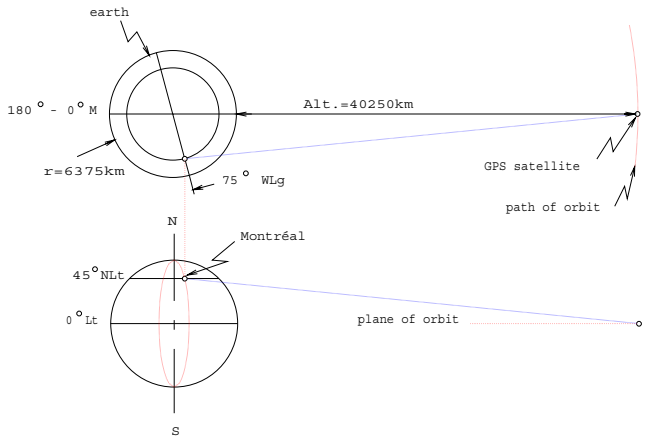

- [ ] =44731.181km
- [ ] =45114.424km
- [x] =45888.298km
- [ ] =46019.532km

Hint: Subtract vectors.

Hint: Don't forget how to find Cartesian (x,y,z) coordinates from a spherical frame.

This 3-digit precision is enough to resolve a difference of 1m "on the ground".

- [ ] True
- [x] False

Question 4.
Topics 15 & 18

(FD1)MLX443D

Final Exam 04-04-29, 2hrs. 261, 3hrs. 262

Name:- key

Student Number:- _____

(circle one) MECH 261 262

The pipe diameter is 600mm. The orifice (obstruction) meter is of diameter 100mm. Estimate the mass flow in kg/s. Use g=9.81 m/s^2, ρ =1000 kg/m^3 .

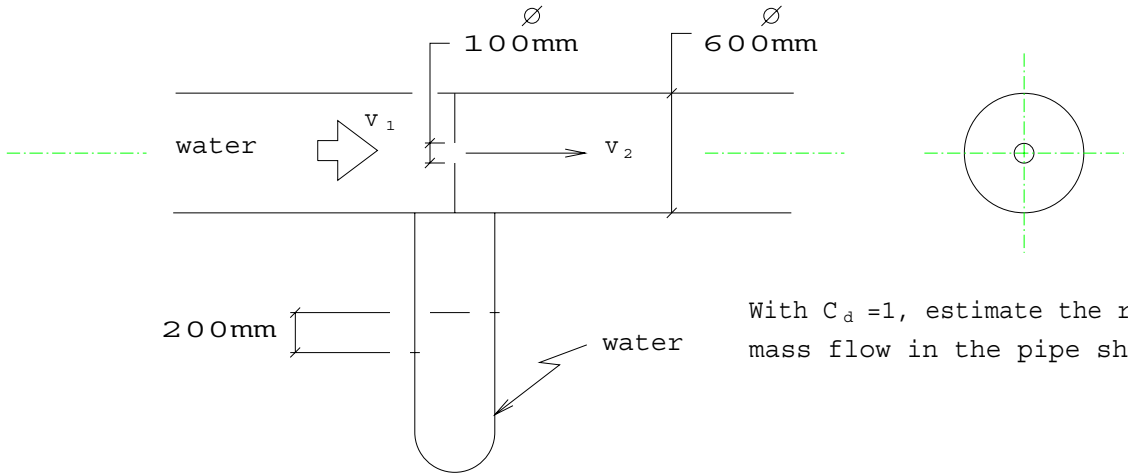

With C_d =1, estimate the rate of fluid mass flow in the pipe shown above.

☐ 1.401kg/s ☐ 1.441kg/s ▨ 11.113kg/s ☐ 11.001kg/s ☐ 14.007kg/s ☐ 14.407kg/s

Question 5.
Topic 22

(FD1)MLX443E

Final Exam 04-04-29, 2hrs. 261, 3hrs. 262
Name:- key
Student Number:- _____
(circle one) MECH 261 262

Reading instruments and making conversions are essential in obtaining measurements.
An aneroid (desk) barometer was photographed in my office.
It reads in inches (in) of mercury (Hg). The corresponding reading of a thermometer on the wall was 22.5C. What was the density of air in my office?

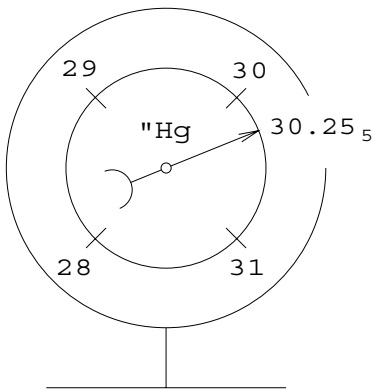

This is a facsimile of the photograph that was very hard to read and made candidates unhappy.

- [ ] 1.9923kg/m^3
- [ ] 1.2057kg/m^3
- [ ] 1.2093kg/m^3
- [ ] 1.2104kg/m^3
- [ ] 1.2187kg/m^3
- [ ] 1.2216kg/m^3

Take mercury density as 13590kg/m^3
Absolute zero is -273.3C
1in = 0.0254m

Question 6.
Topic 22

(FD1)MLX443F

Final Exam 04-04-29, 2hrs. 261, 3hrs. 262
Name:- key
Student Number:- _____
(circle one) MECH 261 262

MECH 2004 Measurement Final Answers and Solutions

Ques. 6 only, more to come(FD1)FX04Sol79x.tex

September 26, 2007

1 Aneroid Barometer, Given and Find

Just for fun this question will be done backwards. *I.e.*, it will be assumed that the air density $\rho = 1.2104\text{kg/m}^3$ and temperature $T = 22.5\text{C}$ are given and one must find the barometer reading in inches of mercury ($''$Hg).

2 Solution using Imperial Units

Because I recall the specific gas constant for air as $R = 53.3\text{ft}\#(\text{f})/[\#(\text{m})^\circ\text{R}]$. First we do the temperature conversion to absolute Fahrenheit, ($^\circ$R), called degrees Rankine.

$$T_R = (22.5 + 273.3)\frac{9}{5}$$

The perfect gas law says

$$\frac{p}{\rho} = RT$$

so the density in $\#(\text{m})/\text{ft}^3$ is required.

$$\frac{1.2104 \times 2.2}{(39.37/12)^3} = 0.075404816$$

Notice the use of the necessary conversion factors between kg and #, $''$/m and $''$/ft. Finally one obtains the air pressure in $\#(\text{f})/''^2$ (psi) as follows.

$$p = \frac{0.075404816 \times 53.3 \times (22.5 + 273.3)\frac{9}{5}}{144} = 14.86053625$$

Dividing the absolute pressure by 14.696psi, a standard atmosphere, one gets 1.011195988Atm. Knowing that this is equivalent to 760mmHg or 29.92"Hg the barometer reading should be

$$1.011195988 \times 29.92 = 30.25_5$$

an that is what the meter says. Now do the problem as asked, using the barometer reading to get ρ in kg/m^3.

(FD1)FX04Sol79z.tex.tex

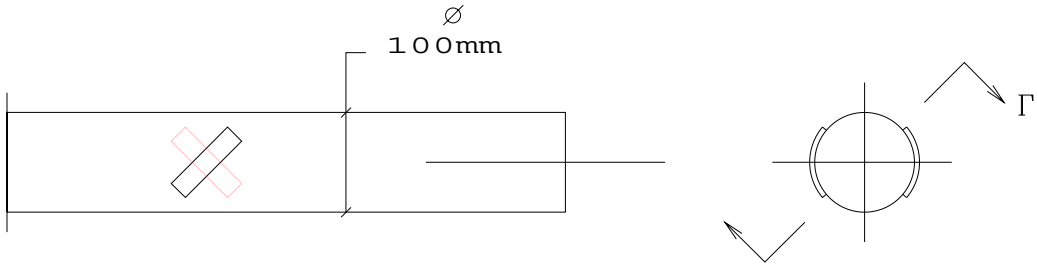

At 1000 $\mu\varepsilon$ this solid cylindrical steel torsion bar torque transducer sustans a torque of Γ =

- [x] 40.64kNm
- [ ] 4.064kNm
- [ ] 20.42kNm
- [ ] 25.18kNm
- [ ] 36.74kNm

Use $E=2.07\times10^{11}$ N/m^2

Question 7.
Topic 10

(FD1)MLX443G

Final Exam 04-04-29, 2hrs. 261, 3hrs. 262
Name:- key
Student Number:- _____
(circle one) MECH 261 262

Regard the four thermocouple/millivoltmeter circuits as systems with two voltage sources and an instrument of infinite input impedance.

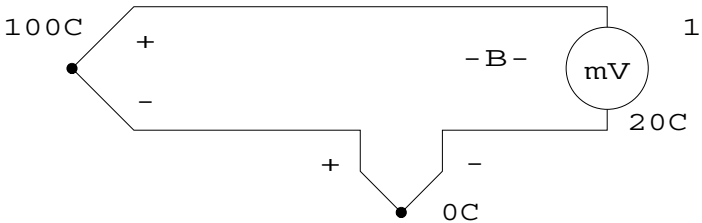

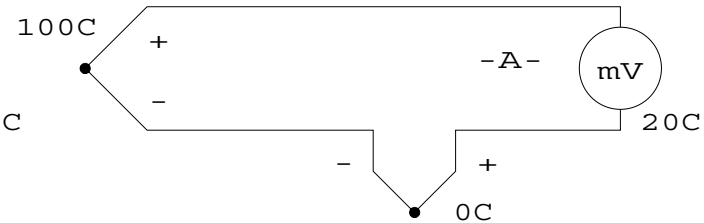

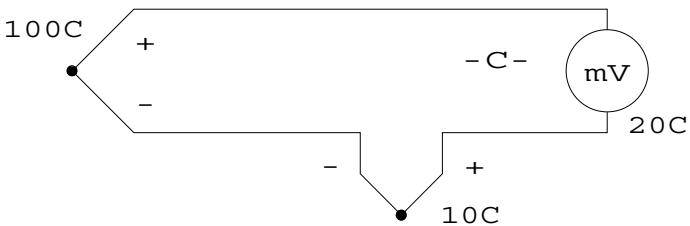

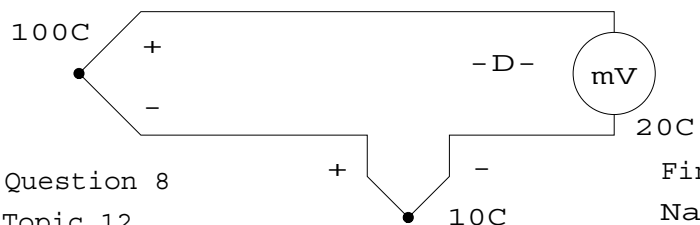

Rank the circuit outputs from 1 (lowest reading) to 4 (greatest absolute reading value).

	1	2	3	4
-A-	▒			
-B-				▒
-C-			▒	
-D-		▒		

Hint:- Assume output =0mV at 0C.

Question 8
Topic 12

Final Exam 04-04-29, 2hrs. 261, 3hrs. 262

Name:- key

Student Number:- _____

(circle one) MECH 261 262

(FD1)MLX443H

Given five points (2,1),(3,2),(4,3),(5,5),(6,4), find the line of best least-squares normal distance fit.

Which of the points are on this line, in the order presented above?

(2,1)	(3,2)	(4,3)	(5,5)	(6,4)
▤	▤	▤	□	□

Carefully plot the straight line and points on the graph below. Indicate points with (+) and G, the centroid with (*).

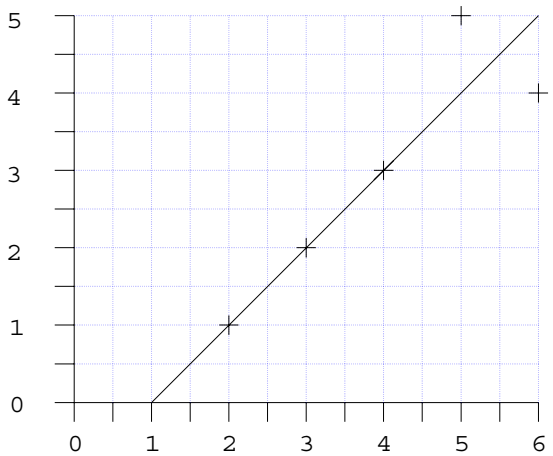

(Statistics)
Question 9.
Topics 7,8

(FD1)STX443I

Final Exam 04-04-29, 3hrs. 262

Name:- key

Student Number:- _____

Volkswagen offers three types of "Golf". (CL, GLS, GT)
Some of these are available with four engine choices. (2L, 1.8T, VR6, 1.9TD)
All three car models are available with either manual or automatic transmission. (5Sp, AT)
Not all five colours are available with all models.
(Bk=black, Bl=blue, Yw=Yellow, Gr=green, Gy=Grey)
You can't get a grey CL or one with a 1.8T or VR6 engine.
The GLS is available in all possible combinations.
There are no 2L GT's and you can't get a blue or green one.

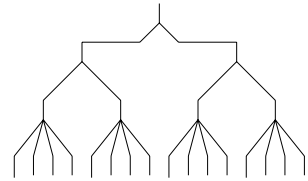

This is the tree for ...

CL GLS GT

This table may help

	2	8	6	9	5	A	k	l	w	r	y
CL	▒			▒	▒	▒	▒	▒	▒	▒	
GLS	▒	▒	▒	▒	▒	▒	▒	▒	▒	▒	▒
GT		▒	▒	▒	▒	▒	▒		▒		▒

There are ....

26	33	72	512	616	704	1000	1331
		▒					

.... different ways to configure your Golf.

(Statistics)
Question 10.
Topic 1

(FD1)STX443J

Final Exam 04-04-29, 3hrs. 262
Name:- key
Student Number:- _____

The correlation coefficient of the line fit in Question 9., specified by $\frac{\lambda_{min}}{\lambda_{max}}$ is ...

1/16	1/17	1/18	1/19	1/20	1/21	1/22	1/23	1/24
☐	☐	☐	▤	☐	☐	☐	☐	☐

The best coefficient possible for any fit is 0

(Statistics)
Question 11.
Topic 10

(FD1)STX443K

Final Exam 04-04-29, 3hrs. 262

Name:- key

Student Number:- _____

CTM claims that the 24 bus at Sherbrooke and McGill College arrives at the time scheduled within a standard deviation of plus/minus one minute. What is the probability that any given bus will arrive within this two-minute interval if arrivals are normally distributed? Assume the claim is valid.

☐ 0 ☐ 0.5 ☐ 0.3413 ▨ 0.6826 ☐ 0.4772 ☐ 0.9544

If the interval between buses is 15 minutes, what is the probability the bus you're waiting for won't arrive? Assume you got there exactly on time. The bus is late, not early.

▨ 0 ☐ 0.5 ☐ 0.3413 ☐ 0.6826 ☐ 0.4772 ☐ 0.9544

What's the probability, upon your arriving at the stop exactly on time, that the bus has already passed?

☐ 0 ▨ 0.5 ☐ 0.3413 ☐ 0.6826 ☐ 0.4772 ☐ 0.9544

(Statistics)
Question 12.
Topic 6

(FD1)STX443L

Hint:- See "Appendix 3" in notes.
If table doesn't show the σ interval you need, extrapolate.

Final Exam 04-04-29, 3hrs. 262
Name:- key
Student Number:- _____

1. A thermistor is

a) A semiconductor device.

b) Has a resistance -vs- temperature behaviour given by $\Delta R = k\ \Delta T$ where k is constant.

c) Is a resistor.

d) Is used to measure strain.

	T	F
a)	■	
b)		■
c)	■	
d)		■

Answer by blackening the right rectangles. ■

2. An 8-bit differential ADC with an input voltage range of ±10v should be augmented with a differential input instrumentation amplifier of gain (They are only available with settings of x10 æn) in order to achieve maximum resolution when measuring a signal expected to vary between -30 and +50v?

x10 $^{-2}$	x10 $^{-1}$	x10 ^{0}	x10 ^{1}	x10 ^{2}
	■			

3. What is the precision in counts/volt achieved in 2., above?

2^{0}	2^{1}	2^{2}	2^{3}	2^{4}	2^{5}	2^{6}
			■			

Midterm Test 04-02-19, 80min. 261, 120min. 262

Name:- key

Student Number:- _____

(circle one) MECH 261 262

(FD1)MLT42sA

Q 3.:- Raw:- Input span is +10/-10v=20v. Output span is 255 counts.

Therefore $\frac{255}{20}$ =12.25counts/v. Always round down in integer arirhmetic.

Since 12 is equidistant from 2^3 and 2^4, either would be acceptable.

With amplifier:- Input span is 200v. Output span is still 255 counts.

Therefore $\frac{255}{200}$ =1.225counts/v. Again, round down.

Since $1=2^0$, this too is acceptable. The -30v to +50v doesn't change anything.

$$\frac{(80/200)255}{80}=1.225$$

2. An 8-bit differential ADC with an input voltage range of ±10v should be augmented with a differential input instrumentation amplifier of gain (They are only available with settings of $x10^{\pm n}$) in order to achieve maximum resolution when measuring a signal expected to vary between -30 and +50v?

$x10^{-2}$	$x10^{-1}$	$x10^{0}$	$x10^{1}$	$x10^{2}$
☐	▤	☐	☐	☐

3. What is the precision in counts/volt achieved in 2., above?

2^0	2^1	2^2	2^3	2^4	2^5	2^6
▤	☐	☐	▤	▤	☐	☐

(FD1)MLT42sA1

Midterm Test 04-02-19, 80min. 261, 120min. 262

Name:- key

Student Number:- _____

(circle one) MECH 261 262

4. Represent the number 57 in binary in the top 8-bit field, its one's complement in the next and its negative, two's complement, in the bottom one.

Answer by blackening the right rectangles.

±	6	5	4	3	2	1	0

= "one"

= "zero"

5. What is the shear modulus G of aluminum whose Young's modulus $E=0.70 \times 10^{11}$ Pa and whose Poisson's ratio is $\mu=0.33$? Choose the closest value.

0.40×10^{11} Pa ☐ 0.35×10^{11} Pa ☐ 0.30×10^{11} Pa ☐

0.25×10^{11} Pa ☐ 0.20×10^{11} Pa ☐ 0.15×10^{11} Pa ☐

6. What is the peak-to-peak voltage of a 220v AC RMS domestic (sinusoidal) power supplied by Hydro-Qu bec? 120v ☐ 220v ☐ 320v ☐ 420v ☐ 520v ☐ 620v ☐ 720v ☐

Midterm Test 04-02-19, 80min. 261, 120min. 262

Name:- key

Student Number:- _____

(circle one) MECH 261 262

(FD1)MLT42sB

7. The linearized first order temperature measuring system refered to on the included sheet of explanation is sitting at 20C and is plunged into boiling water at 100C, suddenly, at t=0.
The initial voltage output was 1.6mv. After a long time the output is 4.3mv.
Find k_0 =k and specify the units.

80/2.7 ☐ 2.7/80 ☐ 120/5.9 ☐ 5.9/120 ☐ -2.7/120 ☐ -80/2.7 ☐

v/C ☐ C/mv ☐ mv/C ☐

8. The exercise above is repeated but this time a reading at t=1.4s yields an output of 2.9mv. Find the time constant and coefficient c.

c= 4.918 ☐ 6.213 ☐ 8.043 ☐ 5.675 ☐ k/c= 1.894 ☐ 5.221 ☐ -2.227 ☐

Answer by blackening the right rectangles.

(FD1)MLT42sC

Midterm Test 04-02-19, 80min. 261, 120min. 262

Name:- key

Student Number:- _____

(circle one) MECH 261 262

STATISTICS

9. Given the 4 points (1,1),(2,1),(3,3),(4,2) do a best least squares sum fit minimizing the sum of Δx^2. I.e., Find a′ and b′ and plot results below, neatly.

a′= -10/11 10/11 -11/10 11/10

b′= 1 2 3 -1 -2 -3

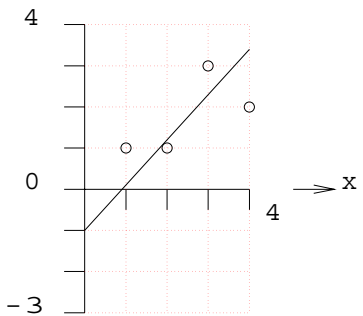

Answer by blackening the right rectangles and drawing a straight line.

(FD1)STT42sD

Midterm Test 04-02-19, 120min. 262

Name:- key

Student Number:- _____

(circle one) MECH 261 262

STATISTICS

10. Using the results from Question 9, compute the variance, v, and the standard deviation, σ, of $\Delta_i y$ in y=a'x+b'. Use n=4 because we are refering these to the line which we now know. The first entry in the table below is done to make your job easy.

x_i	y'_i (y'=a'x+b')	y_i	Δy_i	Δy_i^2
1	1.1-1=0.1	1	+0.9	0.81
2	2.2-1=1.2	1	-0.2	0.04
3	3.3-1=2.2	3	+0.8	0.64
4	4.4-1=3.2	2	-1.2	1.44
				$\frac{2.93}{4}$

v= 0.417 ☐ 0.189 ☐ 0.733 ▤ 0.629 ☐

σ = 0.718 ☐ 0.856 ▤ 0.337 ☐ 0.504 ☐

Answer by blackening the the right rectangle. ▤

(FD1)STT42sE

Midterm Test 04-02-19, 120min. 262

Name:- key

Student Number:- _____

(circle one) MECH 261 262

STATISTICS 11. A lazy student attempts this test by randomly choosing to fill rectangles for all previous questions except Question 4 which requires multiple filling. All questions are of equal value so consider these nine questions, 1,2,3,5,6,7,8,9,10 will yield a perfect score of 10 each =90. What is his* expected score based on the law of large numbers? Falses are not deducted from Trues in T/F questions. If a question has 2 parts, each is worth 5 marks. Do not include this question.

☐	☐	▤	☐	☐	☐	☐	☐
5	10	20	25	30	35	40	50

Sorry about the lack of a 4th statistics question and for leaving out binomial, Poisson's distribution, rotten eggs, cancer and all that stuff. You'll see it on the final. I Think we've all had enough by now and somebody's gotta grade it.

* I don't think the ladies will mind my political incorrectness.

Answer by blackening the the right rectangle. ▤

(FD1)STT42sF

Midterm Test 04-02-19, 120min. 262

Name:- key

Student Number:- _____

(circle one) MECH 261 262