A Unified Approach to Direct Kinematics of some Reduced Motion Parallel Manipulators

P.J. Zsombor-Murray* and A. Gfrerrer**

*Centre for Intelligent Machines, McGill University, Montreal, Canada

**Institute für Geometrie, TU-Graz, Graz, Austria

October 21, 2008

Abstract After discussing the Study point transformation operator, a unified way to formulate kinematic problems, using "points moving on planes or spheres" constraint equations, is introduced. Application to the direct kinematics problem solution of a number of different parallel Schönflies motion robots is then developed. Certain not widely used but useful tools of algebraic geometry are explained and applied for this purpose. These constraints and tools are also applied to some special parallel robots called "double triangular" to show that the approach is flexible and universally pertinent to manipulator kinematics in reducing the complexity of some previously achieved solutions. Finally a novel two legged Schönflies architecture is revealed to emphasize that good design is not only essential to good performance but also to easily solved kinematic models.

Keywords *kinematics, direct, parallel, Schönflies motion, robot, Study parameters*

1 Introduction

This article was originally intended only to revisit, with reformulation using Study parameters, the direct kinematic analysis (DK) of two special parallel mechanisms, so-called double triangular manipulators (DTM). These parameters, eight homogeneous coordinates of kinematic image space, are also called the elements of a dual quaternion. Double triangular mechanisms include a planar, a spherical and a full six degree of freedom (dof) spatial type, all introduced by Daniali [5, 6]. This re-investigation of limited scope produced simplifications in solution and some insight that emboldened the authors to go farther afield and include a number of unrelated but possibly more practical parallel manipulators under the unifying umbrella of these analytical tools. The extended work reported herein concentrates on so-called Schönflies four dof manipulators, characterized by four distinctly different architectures and investigated by Nabat *et al* [11], Angeles *et al* [1], Gauthier [7] and Zsombor-Murray [15], respectively, that admit all three translational degrees and one rotation about a fixed axis. A treatment of spherical DTM DK analysis is included.

The general Euclidean displacement κ in 3-space can be described by

$$\mathbf{q} = \mathbf{M}\mathbf{p} \tag{1}$$

Here **M** is the 4×4 matrix

$$\mathbf{M} = \begin{bmatrix} x_0^2+x_1^2+x_2^2+x_3^2 & 0 & 0 & 0 \\ 2(x_0y_1-x_1y_0+x_2y_3-x_3y_2) & x_0^2+x_1^2-x_2^2-x_3^2 & 2(x_1x_2-x_0x_3) & 2(x_1x_3+x_0x_2) \\ 2(x_0y_2-x_2y_0+x_3y_1-x_1y_3) & 2(x_1x_2+x_0x_3) & x_0^2-x_1^2+x_2^2-x_3^2 & 2(x_2x_3-x_0x_1) \\ 2(x_0y_3-x_3y_0+x_1y_2-x_2y_1) & 2(x_1x_3-x_0x_2) & 2(x_2x_3+x_0x_1) & x_0^2-x_1^2-x_2^2+x_3^2 \end{bmatrix} \tag{2}$$

and $x_0, x_1, x_2, x_3, y_0, y_1, y_2, y_3$ are the Study-parameters which have to fulfil the Study condition

$$x_0y_0 + x_1y_1 + x_2y_2 + x_3y_3 = 0, \tag{3}$$

and the non-zero condition

$$x_0^2 + x_1^2 + x_2^2 + x_3^2 \neq 0. \tag{4}$$

$$\begin{aligned} t_1 &= 2(x_0y_1 - x_1y_0 + x_2y_3 - x_3y_2), \\ t_2 &= 2(x_0y_2 - x_2y_0 + x_3y_1 - x_1y_3), \\ t_3 &= 2(x_0y_3 - x_3y_0 + x_1y_2 - x_2y_1) \end{aligned} \tag{5}$$

are the **translation components** in $x-, y-$ and $z-$direction and

$$\mathbf{p} = \begin{bmatrix} p_0 \\ p_1 \\ p_2 \\ p_3 \end{bmatrix}, \qquad \mathbf{q} = \begin{bmatrix} q_0 \\ q_1 \\ q_2 \\ q_3 \end{bmatrix}$$

are the homogeneous coordinate vectors of a point P and its image Q under κ.

The rest of the paper is organized as follows: Section 2 contains the general formulation of planar and spherical constraints in terms of Study parameters. In the three sections 3, 4, 5 we demonstrate the applicability of the method by treating some manipulator classes pertaining to the types mentioned above.

2 Planar and Spherical Constraints

In general, a kinematic mapping approach to any problem involves the selection of a set of point, plane and/or line elements, all on a chosen subassembly, called EE, of the mechanism in question, and displacing these according to some parameters, x_i, y_i, to be determined so that the selected elements fall on appropriate constraint surfaces on the remaining portion of the mechanism, called FF. In what follows only point elements and planar or spherical constraint surfaces will be used. Notwithstanding these restrictions it will be seen that a rich variety of mechanical situations can be dealt with.

2.1 Planar Constraints

Given the transformation relation, Eq. 1, consider a planar surface constraint equation. This can be written as

$$\mathbf{e}^\top \mathbf{q} \;=\; \mathbf{e}^\top \mathbf{M}\,\mathbf{p} \;=\; e_0 q_0 + e_1 q_1 + e_2 q_2 + e_3 q_3 \;=\; 0 \tag{6}$$

with

$$\mathbf{e} = \begin{bmatrix} e_0 \\ e_1 \\ e_2 \\ e_3 \end{bmatrix}$$

denoting the homogeneous coordinate vector of the constraint plane ε in the fixed frame and

$$\mathbf{p} = \begin{bmatrix} 1 \\ p_1 \\ p_2 \\ p_3 \end{bmatrix}$$

that of the point P in the moving frame whose image Q has to lie in ε.

Only **normalized homogeneous point coordinates** ($p_0 = 1$) are used throughout to maintain points in Euclidean space, represented by Cartesian coordinates. *E.g.*, p_1, p_2, p_3, are the coordinates of P in the moving, end effector frame EE.

Eq. (6) is a homogeneous quadratic constraint equation in terms of Study parameters $x_0, x_1, x_2, x_3, y_0, y_1, y_2, y_3$. It can be compactly written as follows:

$$[x_0, x_1, x_2, x_3, y_0, y_1, y_2, y_3]\ \mathbf{C} \begin{bmatrix} x_0 \\ x_1 \\ x_2 \\ x_3 \\ y_0 \\ y_1 \\ y_2 \\ y_3 \end{bmatrix} = 0 \tag{7}$$

Here $\mathbf{C}$ is an 8×8 matrix of the form

$$\mathbf{C} = \begin{bmatrix} \mathbf{A} & \mathbf{B} \\ \\ \mathbf{B}^\top & \mathbf{O} \end{bmatrix} \tag{8}$$

where $\mathbf{A}$ is the 4×4 symmetric matrix

$\mathbf{O}$ is a 4×4 zero block while $\mathbf{A}$ is symmetric and $\mathbf{B}$ is skew-symmetric. They can be written as follows:

$$\mathbf{A} = \begin{bmatrix} e_0 + e_1p_1 + e_2p_2 + e_3p_3 & e_3p_2 - e_2p_3 & e_1p_3 - e_3p_1 & e_2p_1 - e_1p_2 \\ e_3p_2 - e_2p_3 & e_0 + e_1p_1 - e_2p_2 - e_3p_3 & e_2p_1 + e_1p_2 & e_1p_3 + e_3p_1 \\ e_1p_3 - e_3p_1 & e_2p_1 + e_1p_2 & e_0 - e_1p_1 + e_2p_2 - e_3p_3 & e_3p_2 + e_2p_3 \\ e_2p_1 - e_1p_2 & e_1p_3 + e_3p_1 & e_3p_2 + e_2p_3 & e_0 - e_1p_1 - e_2p_2 + e_3p_3 \end{bmatrix} \tag{9}$$

$$\mathbf{B} = \begin{bmatrix} 0 & e_1 & e_2 & e_3 \\ \\ -e_1 & 0 & e_3 & -e_2 \\ \\ -e_2 & -e_3 & 0 & e_1 \\ \\ -e_3 & e_2 & -e_1 & 0 \end{bmatrix} \tag{10}$$

2.2 Spherical Constraints

A spherical constraint on the position of an image point $Q(q_0, q_1, q_2, q_3)$ is a condition of the form

$$q_1^2 + q_2^2 + q_3^2 + e_1 q_0 q_1 + e_2 q_0 q_2 + e_3 q_0 q_3 + e_0 q_0^2 \quad = \quad 0. \tag{11}$$

where $e_i = -2m_i, i = 1, 2, 3$ and $e_0 = m_1^2 + m_2^2 + m_3^2 - r^2$ with m_i being the centre coordinates of the sphere κ under consideration and r denoting its radius.

Since condition (11) is quadratic in q_i and q_i themselves are quadratic in the Study parameters, an *a-priori* **quartic** constraint on q_i is obtained.

However by applying a method due to [8][1] this is thus reduced to a quadratic equation:

Four times the square of the Study condition (3) is added to the implicit equation (11) to obtain a polynomial that is the product of

$$x_0^2 + x_1^2 + x_2^2 + x_3^2$$

and a homogeneous quadratic factor f in the eight Study parameters:

$$\begin{aligned} q_1^2 + q_2^2 + q_3^2 + e_1 q_0 q_1 + e_2 q_0 q_2 + e_3 q_0 q_3 + e_0 q_0^2 + 4(x_0 y_0 + x_1 y_1 + x_2 y_2 + x_3 y_3)^2 \quad &= \\ (x_0^2 + x_1^2 + x_2^2 + x_3^2) \cdot f(x_0, x_1, x_2, x_3, y_0, y_1, y_2, y_3) \end{aligned}$$

Since $x_0^2 + x_1^2 + x_2^2 + x_3^2 \neq 0$ and $x_0 y_0 + x_1 y_1 + x_2 y_2 + x_3 y_3 = 0$ the constraint equation imposed by a sphere constraint is:

$$f(x_0, x_1, x_2, x_3, y_0, y_1, y_2, y_3) \quad = \quad 0 \tag{12}$$

Compressing coefficients, a compact matrix form is obtained as:

[1] M. Husty [8] was first to apply this technique to formulate the DK algorithm for the general Stuart-Gough platform manipulator where six points in EE are displaced onto six spheres in FF.

$$f(x_0, x_1, x_2, x_3, y_0, y_1, y_2, y_3) \;=\; [x_0, x_1, x_2, x_3, y_0, y_1, y_2, y_3]\, \mathbf{C}^* \begin{bmatrix} x_0 \\ x_1 \\ x_2 \\ x_3 \\ y_0 \\ y_1 \\ y_2 \\ y_3 \end{bmatrix} \;=\; 0 \qquad (13)$$

The resulting 8×8 matrix $\mathbf{C}^*$ is abbreviated to block form as

$$\mathbf{C}^* \;=\; \begin{bmatrix} \mathbf{A} + (p_1^2 + p_2^2 + p_3^2)\mathbf{I} & \mathbf{B}^* \\ \\ \mathbf{B}^{*\top} & 4\,\mathbf{I} \end{bmatrix} \qquad (14)$$

where $\mathbf{A}$ is the 4×4 symmetric matrix (Eq. 9), $\mathbf{B}^*$ is the 4×4 skew symmetric matrix

$$\mathbf{B}^* = \begin{bmatrix} 0 & e_1 + 2p_1 & e_2 + 2p_2 & e_3 + 2p_3 \\ \\ -e_1 - 2p_1 & 0 & e_3 - 2p_3 & -e_2 + 2p_2 \\ \\ -e_2 - 2p_2 & -e_3 + 2p_3 & 0 & e_1 - 2p_1 \\ \\ -e_3 - 2p_3 & e_2 - 2p_2 & -e_1 + 2p_1 & 0 \end{bmatrix} \qquad (15)$$

and $\mathbf{I}$ is the 4×4 identity matrix.

2.3 Constraint Equation Structure

- Comparing Eqs. 8, 9, 10 and 14, 15 one sees that matrices $\mathbf{C}$ and $\mathbf{C}^*$, that contain only given parameters, are quite similar in structure.
- In the case of the point-on-plane (PoP) constraint the matrix $\mathbf{C}$ leads to an equation that is linear in y_i.
- The point-on-sphere (PoS) constraint contains a term $4\sum_{i=0}^{3} y_i^2$ but there are no other quadratic terms in y_i.
- In the case of more than one sphere constraint, only one needs to remain quadratic in y_i because it can be subtracted from the others to remove all y_i^2.

- For a full six dof manipulator problem, six constraint equations are required. The non-zero condition and the Study condition

$$\sum_{i=0}^{3} x_i^2 \neq 0, \quad \sum_{i=0}^{3} x_i y_i = 0$$

are added as additional constraints to handle eight unknown parameters.

3 Schönflies manipulator DK with plane and/or sphere constraints

The four parameter subgroup of Schönflies displacements contains the proper Euclidean transformations that confine rotation to a fixed axial direction. Here the common direction is taken parallel to the z- or x_3-axis of EE and FF. Analytic description of this group is obtained by substituting

$$x_1 = x_2 = 0 \tag{16}$$

in the general displacement matrix, Eq. 2, so as to become the 4×4 matrix, Eq. 17.

$$\mathbf{M} = \begin{bmatrix} x_0^2 + x_3^2 & 0 & 0 & 0 \\ 2(x_0 y_1 - x_3 y_2) & x_0^2 - x_3^2 & -2x_0 x_3 & 0 \\ 2(x_0 y_2 + x_3 y_1) & 2x_0 x_3 & x_0^2 - x_3^2 & 0 \\ 2(x_0 y_3 - x_3 y_0) & 0 & 0 & x_0^2 + x_3^2 \end{bmatrix} = \begin{bmatrix} x_0^2 + x_3^2 & 0 & 0 & 0 \\ t_1 & x_0^2 - x_3^2 & -2x_0 x_3 & 0 \\ t_2 & 2x_0 x_3 & x_0^2 - x_3^2 & 0 \\ t_3 & 0 & 0 & x_0^2 + x_3^2 \end{bmatrix} \tag{17}$$

Simplified first column (translation) elements are shown above on the right and are defined below.

$$\left.\begin{aligned} t_1 &= 2(x_0 y_1 - x_3 y_2), \\ t_2 &= 2(x_0 y_2 + x_3 y_1), \\ t_3 &= 2(x_0 y_3 - x_3 y_0). \end{aligned}\right\} \tag{18}$$

The Study condition and the non-zero condition are similarly reduced

$$x_0 y_0 + x_3 y_3 = 0, \tag{19}$$

$$x_0^2 + x_3^2 \neq 0. \tag{20}$$

A Schönflies manipulator is any mechanism that admits only Schönflies motions.

In case of Schönflies displacement, a plane constraint is represented by matrix $\mathbf{C}$, (Eq. 8), with second and the third rows and columns removed, that now reads as

$$a_1x_0^2 + 2a_2x_0x_3 + a_3x_3^2 + 2e_1(x_0y_1 - x_3y_2) + 2e_2(x_0y_2 + x_3y_1) + 2e_3(x_0y_3 - x_3y_0) \quad = \quad 0 \tag{21}$$

or, using t_i, defined by Eq. 18, as

$$a_1x_0^2 + 2a_2x_0x_3 + a_3x_3^2 + e_1t_1 + e_2t_2 + e_3t_3 \quad = \quad 0, \tag{22}$$

where

$$\begin{aligned} a_1 &= e_0 + e_1p_1 + e_2p_2 + e_3p_3, \\ a_2 &= e_2p_1 - e_1p_2, \\ a_3 &= e_0 - e_1p_1 - e_2p_2 + e_3p_3. \end{aligned}$$

Similarly a simplified[2] sphere constraint, in case of the Schönflies motion, is written:

$$\begin{aligned} a_1^*x_0^2 + 2a_2^*x_0x_3 + a_3^*x_3^2 + 2b_1^*x_0y_1 + 2b_2^*x_3y_2 + 2b_3^*x_0y_2 + 2b_4^*x_3y_1 + 2b_5^*(x_0y_3 - x_3y_0) \quad &+ \\ 4(y_0^2 + y_1^2 + y_2^2 + y_3^2) \quad &= \quad 0 \end{aligned} \tag{23}$$

where

$$\begin{aligned} a_1^* &= e_0 + e_1p_1 + e_2p_2 + e_3p_3 + p_1^2 + p_2^2 + p_3^2, \\ a_2^* &= e_2p_1 - e_1p_2, \\ a_3^* &= e_0 - e_1p_1 - e_2p_2 + e_3p_3 + p_1^2 + p_2^2 + p_3^2, \\ b_1^* &= e_1 + 2p_1, \\ b_2^* &= -e_1 + 2p_1, \\ b_3^* &= e_2 + 2p_2, \\ b_4^* &= e_2 - 2p_2, \\ b_5^* &= e_3 + 2p_3. \end{aligned}$$

3.1 Schönflies Motion with Three PoP Constraints

To better understand geometric techniques used later in specific examples of parallel manipulator architectures it is useful to discuss the simple one parameter Darboux motion that results when three PoP constraints are imposed, along with $x_1 = x_2 = 0$, so as to eliminate the three translation parameters

[2] Only six of the bilinear terms x_iy_j occur.

$t_{1,2,3}$ from Eq. 17. The resulting motion causes *all* points on EE to describe elliptical arcs under this one dof motion. Hence the fourth constraint, *e.g.*, another PoP or PoS, describes the solution to the DK problem at hand in terms of an ellipse intersecting the fourth constraint surface, *i.e.*, a plane or sphere. Insight gained from this approach shows that such a problem must necessarily admit two or four DK solutions. Bottema and Roth [3] deal extensively with Darboux motion and Vogler [13] has recently shown that Schönflies motion with three PoP constraints is Darboux motion. All that is needed here is to show that, given three PoP constraints, the translational components $t_{1,2,3}$ are homogeneous quadratic functions in x_0 or x_3, *i.e.*, the resulting motion is *rational* of order 2.

Let

$$a_{i1}x_0^2 + 2a_{i2}x_0x_3 + a_{i3}x_3^2 + 2e_{i1}(x_0y_1 - x_3y_2) + 2e_{i2}(x_0y_2 + x_3y_1) + 2e_{i3}(x_0y_3 - x_3y_0) \quad = \quad 0 \tag{24}$$

be the three PoP constraints, $i = 1, 2, 3$ (compare with eq. 22). With some further symbolic compression, as noted afterward, the following four expressions, Eq. 25, generated with Eq. 24 via Cramer's rule, are offered, by way of proof, to show that one indeed obtains a Darboux motion.

$$\begin{aligned}
y_0 &= -x_3 \cdot \frac{\gamma_2(x_0, x_3)}{2\Delta \cdot (x_0^2 + x_3^2)}, \\
y_1 &= \frac{x_0 \cdot \alpha_2(x_0, x_3) + x_3 \cdot \beta_2(x_0, x_3)}{2\Delta \cdot (x_0^2 + x_3^2)}, \\
y_2 &= \frac{x_0 \cdot \beta_2(x_0, x_3) - x_3 \cdot \alpha_2(x_0, x_3)}{2\Delta \cdot (x_0^2 + x_3^2)}, \\
y_3 &= x_0 \cdot \frac{\gamma_2(x_0, x_3)}{2\Delta \cdot (x_0^2 + x_3^2)}
\end{aligned} \tag{25}$$

where $\alpha_2(x_0, x_3), \beta_2(x_0, x_3), \gamma_2(x_0, x_3)$ are the quadratic homogeneous polynomials

$$\begin{aligned}
\alpha_2(x_0, x_3) &= [|\mathbf{a}_1\ \mathbf{e}_2\ \mathbf{e}_3|\ |\mathbf{a}_2\ \mathbf{e}_2\ \mathbf{e}_3|\ |\mathbf{a}_3\ \mathbf{e}_2\ \mathbf{e}_3|]\,[x_0^2\ \ 2x_0x_3\ \ x_3^2]^\top \\
\beta_2(x_0, x_3) &= [|\mathbf{e}_1\ \mathbf{a}_1\ \mathbf{e}_3|\ |\mathbf{e}_1\ \mathbf{a}_2\ \mathbf{e}_3|\ |\mathbf{e}_1\ \mathbf{a}_3\ \mathbf{e}_3|]\,[x_0^2\ \ 2x_0x_3\ \ x_3^2]^\top \\
\gamma_2(x_0, x_3) &= [|\mathbf{e}_1\ \mathbf{e}_2\ \mathbf{a}_1|\ |\mathbf{e}_1\ \mathbf{e}_2\ \mathbf{a}_2|\ |\mathbf{e}_1\ \mathbf{e}_2\ \mathbf{a}_3|]\,[x_0^2\ \ 2x_0x_3\ \ x_3^2]^\top
\end{aligned} \tag{26}$$

and

$$\Delta = |\mathbf{e}_1\ \mathbf{e}_2\ \mathbf{e}_3|, \quad \mathbf{a}_j = \begin{bmatrix} a_{1j} \\ a_{2j} \\ a_{3j} \end{bmatrix}, \quad \mathbf{e}_j = \begin{bmatrix} e_{1j} \\ e_{2j} \\ e_{3j} \end{bmatrix}$$

By substitution of Eq. 25 into Eqs. 18 we get

$$
\begin{aligned}
t_1 &= 2(x_0y_1 - x_3y_2) = \frac{\alpha_2(x_0,x_3)}{\Delta}, \\
t_2 &= 2(x_0y_2 + x_3y_1) = \frac{\beta_2(x_0,x_3)}{\Delta}, \\
t_3 &= 2(x_0y_3 - x_3y_0) = \frac{\gamma_2(x_0,x_3)}{\Delta}.
\end{aligned} \tag{27}
$$

This shows that the translational components $t_{1,2,3}$ are indeed homogeneous quadratic functions in x_0, x_3 as stated.

3.2 DK of Schönflies Manipulators with Three PoP and a Fourth PoP or PoS Constraints

DK solutions to such systems can be found as follows. From the three given PoP constraints we obtain the expressions Eq. 25 and Eq. 27.

- If the fourth constraint surface is a plane represented by Eq. 22 then substitution of Eq. 27 produces a quadratic univariate in x_3 after dehomogenizing with $x_0 = 1$.
- If the fourth surface is a sphere represented by Eq. 23, then by substitution of Eq. 25 the quadratic term $4\sum_{i=0}^{3} y_i^2$ becomes

  $$4(y_0^2 + y_1^2 + y_2^2 + y_3^2) = \frac{1}{\Delta^2(x_0^2 + x_3^2)} \cdot \left[\alpha_2^2(x_0,x_3) + \beta_2^2(x_0,x_3) + \gamma_2^2(x_0,x_3)\right]$$

  Thus, substitution of Eq. 25 in Eq. 23 clearly produces a **quartic** univariate in x_3 after multiplication with the denominator $x_0^2 + x_3^2$ and dehomogenizing with $x_0 = 1$.

Once the values of x_3 are thus obtained, the three equations in Eq. 27 allow one to find the corresponding values of $t_{1,2,3}$ thus completing the definition of the DK displacement implied by the problem.

3.3 DK of Schönflies Manipulators with Two or More PoS Constraints

Let at least two PoS constraints (Eq. 23) be used to characterize the DK of a Schönflies motion. Then the difference between any two PoS equations removes the term $4\sum_{i=0}^{3} y_i^2$ so as to always yield three equations (Eq. 28) linear in y_0, y_1, y_2, y_3.

$$m_{i1}x_0^2 + m_{i2}x_0x_3 + m_{i3}x_3^2 - m_{i4}x_3y_0 + (m_{i5}x_0 + m_{i6}x_3)y_1 + (m_{i7}x_0 + m_{i8}x_3)y_2 + m_{i4}x_0y_3 = 0 \tag{28}$$

Each represents either a PoP constraint or the difference between two PoS constraints. The coefficients $m_{ij},\ i=1,2,3,\ j=1,\ \ldots,\ 8$ are formulated from appropriate combinations of given point, plane or sphere parameters, $p_{kl},\ e_{kl}$.

A fourth constraint contains the term $4\sum_{i=0}^{3} y_i^2$. It has the form of Eq. 23.

A 4×5 matrix, whose rows are coefficients of 1, y_0, y_1, y_2 and y_3, as these appear in the Study condition Eq. 19 and the three Eqs. 28, is set up. Taking determinants of all 4×4 minors with alternating $\pm$ sign and dividing all the rest by the first, *i.e.*, Cramer's rule, yields $y_i = y_i(x_0, x_3)$.

$$
\begin{aligned}
\Delta &= (x_0^2+x_3^2)[\mu_{457}x_0^2 + (\mu_{458}+\mu_{467})x_0x_3 + \mu_{468}x_3^2] &&=: (x_0^2+x_3^2)\cdot\delta_2(x_0,x_3)\\
y_0 &= \frac{x_3}{\Delta}[\mu_{157}x_0^4 + (\mu_{158}+\mu_{167}\ +\mu_{257})x_0^3x_3 + \\
&\qquad (\mu_{168}+\mu_{258}+\mu_{267}+\mu_{357})x_0^2x_3^2 + \\
&\qquad (\mu_{268}+\mu_{358}+\mu_{367})x_0x_3^3 + \mu_{368}x_3^4] &&=: \frac{x_3}{\Delta}\cdot\alpha_4(x_0,x_3)\\
y_1 &= \frac{x_0^2+x_3^2}{\Delta}[\mu_{147}x_0^3 + (\mu_{148}+\mu_{247})x_0^2x_3 + (\mu_{248}+\mu_{347})x_0x_3^2 + \mu_{348}x_3^3] &&=: \frac{x_0^2+x_3^2}{\Delta}\cdot\beta_3(x_0,x_3)\\
y_2 &= -\frac{x_0^2+x_3^2}{\Delta}[\mu_{145}x_0^3 + (\mu_{146}+\mu_{245})x_0^2x_3 + (\mu_{246}+\mu_{345})x_0x_3^2 + \mu_{346}x_3^3] &&=: -\frac{x_0^2+x_3^2}{\Delta}\cdot\gamma_3(x_0,x_3)\\
y_3 &= -\frac{x_0}{x_3}y_0 &&=: -\frac{x_0}{\Delta}\cdot\alpha_4(x_0,x_3)
\end{aligned}
\tag{29}
$$

$$
\text{where}\ \ \mu_{ijk} := |\mathbf{m}_i\ \mathbf{m}_j\ \mathbf{m}_k|,\ \ \mathbf{m}_j = \begin{bmatrix} m_{1j}\\ m_{2j}\\ m_{3j}\end{bmatrix}
$$

Note that homogeneous polynomials $\delta_2(x_0,x_3), \alpha_4(x_0,x_3), \beta_3(x_0,x_3)$ and $\gamma_3(x_0,x_3)$ in x_0, x_3 are of degree $2, 4, 3$ and 3, respectively.

At this point, things do not look encouraging. The numerators in the expressions for y_i are of fifth order and the common denominator Δ is quartic. Improvement in prospects appear after substitution of these expressions into the quadratic term $\sum_{i=0}^{3} y_i^2$ of the fourth constraint Eq. 23:

$$
y_0^2+y_1^2+y_2^2+y_3^2 = \frac{1}{(x_0^2+x_3^2)\cdot\delta_2^2(x_0,x_3)}\cdot\left[\alpha_4^2(x_0,x_3) + (x_0^2+x_3^2)\cdot\left(\beta_3^2(x_0,x_3)+\gamma_3^2(x_0,x_3)\right)\right]
$$

Hence, substitution of Eqs. 29 into the fourth equation yields, after multiplication with the denominator $(x_0^2 + x_3^2) \cdot \delta_2^2(x_0, x_3)$, the following homogeneous **octic** in x_0, x_3:

$$\begin{aligned}(x_0^2 + x_3^2) \cdot \big[\delta_2(x_0, x_3) \cdot \big((a_1^* x_0^2 + 2a_2^* x_0 x_3 + a_3^* x_3^2) \cdot \delta_2(x_0, x_3) \quad &+ \\ 2(b_1^* x_0 + b_4^* x_3) \cdot \beta_3(x_0, x_3) - 2(b_3^* x_0 + b_2^* x_3) \cdot \gamma_3(x_0, x_3) \quad &- \\ 2b_5^* \alpha_4(x_0, x_3)) + 4\left(\beta_3^2(x_0, x_3) + \gamma_3^2(x_0, x_3)\right)\big] + 4\alpha_4^2(x_0, x_3) \quad &= \quad 0 \end{aligned} \tag{30}$$

This establishes the upper bound of eight on the number of possible solutions for any Schönflies DK problem that is defined by PoP and PoS constraints and contains at least two of the latter. With solutions for x_3, and having set $x_0 = 1$, corresponding values of y_i are obtained explicitly with Eqs. 29. So are elements of the transformation, Eq. 17. This essentially solves this DK problem. In the following section it will be shown that eight real DK solutions for such Schönflies architectures can occur.

3.4 Examples of Schönflies Manipulators

3.4.1 Fully Parallel Schönflies Manipulators

Figs. 1 show the Π or parallelogram joint, a feature common to many Schönflies manipulators because it provides a one dof circular translation to the distal link, with respect to the link at the opposite side of the parallelogram. Examining the Figs. 1(a), first, one sees two ways to implement a four Π- and R-joint serial leg so that the distal link is constrained to execute a Schönflies motion. Actuating a basal R-joint as shown on the left causes the remaining free joints to bind the EE attachment point, shown at the centre of the terminal R-joint, to motion in the plane of the two Π-joints. Actuating a basal Π-joint as shown at the right causes that point to move, alas, on a *torus*. A four, similar legged manipulator of the first type is therefore seen to have four PoP constraints and a DK solution admitting two assembly modes as demonstrated in section **3.2**. In the case on the right, circular sections of the torus are shown. DK analysis of such models awaits a future treatment of toroidal constraint that promises to be more complicated. A glance at Zhou's manipulator [14], with $\underline{P}$RΠR legs, shown in Fig. 1(b), fares –if one seeks solution simplicity– somewhat better. The EE attachment points cause the terminal R-joint centres to move on spheres and the DK problem solution admits an octic univariate polynomial.

3.4.2 Two Legged Schönflies Manipulators

Shown in Fig. 2, a) is a novel design prototype revealed by Angeles *et al* [1]. The idea was to achieve superior workspace and dexterity, that one might expect when the number of legs of a parallel robot are

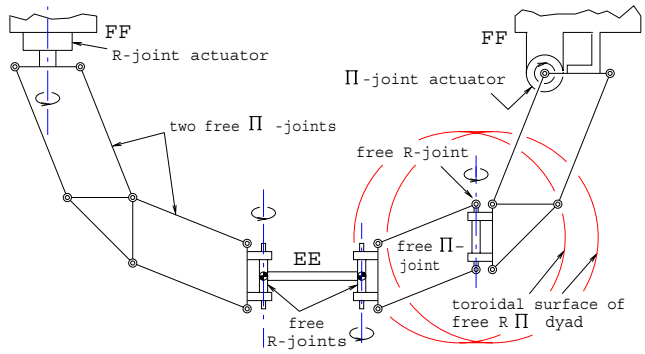

(a) 4- or 2-Legged Schönflies Manipulator with RΠΠR and ΠRΠR Legs

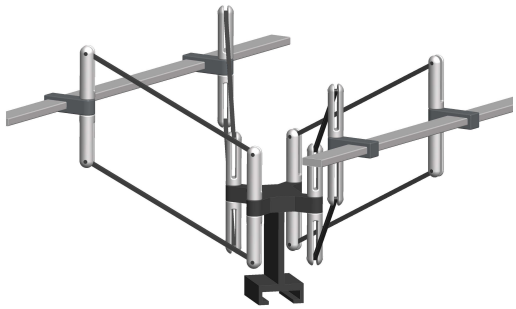

(b) 4-Legged PRΠR Schönflies Robot

Figure 1: Various Leg Architectures in a Variety of Schönflies Parallel Manipulator Contexts

reduced from four to two, while retaining some advantages inherent in parallel architecture. Furthermore maintaining basal actuation is seen as an additional advantage of the design, This avoids placement of motors on moving links, as is done in many serial designs. Two joint actuation is achieved by means of an –also basally mounted– planetary gearbox that delivers torque to both the proximal R- and Π-joints. Only one would be actuated, in typical four legged designs, like those depicted in Fig. 1.

The DK of Angeles' two legged Schönflies manipulator [1] is immediately seen to be modeled as the placement of each of the two EE attachment points P_i on a circle k_i represented by two surfaces, a sphere κ_i and a vertical plane ε_i, $i = 1, 2$. The solution paradigm is typical of all parallel Schönflies manipulator with PoP and more than one PoS constraint. Therefore the setup for the octic univariate, derived in section **3.3**, will be carried out here in some detail.

By appropriate choice of the coordinate system in EE one can assume that the two EE attachment

(a) Planetary Gearbox Drive for Double Basal Actuation

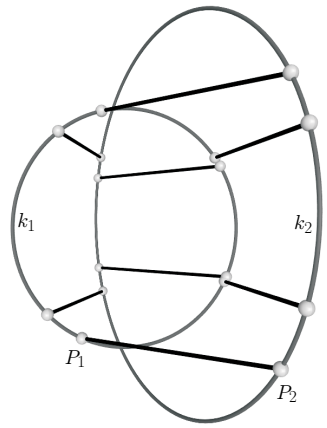

(b) Example with Eight Real DK Solutions

Figure 2: Two Legged Schönflies Manipulator

points P_1, P_2 are given by the vectors

$$\mathbf{p}_1 = \begin{bmatrix} 1 \\ 0 \\ 0 \\ 0 \end{bmatrix}, \quad \mathbf{p}_2 = \begin{bmatrix} 1 \\ d \\ 0 \\ 0 \end{bmatrix}$$

which means that P_1 is on the origin and P_2 on the x-axis of the EE coordinate system. The circles k_1, k_2 are represented by the plane-sphere pairs $(\varepsilon_1, \kappa_1)$ and $(\varepsilon_2, \kappa_2)$:

$$\varepsilon_1 \ldots \mathbf{e}_1 = \begin{bmatrix} e_{10} \\ e_{11} \\ e_{12} \\ 0 \end{bmatrix}, \quad \kappa_1 \ldots \mathbf{e}_2 = \begin{bmatrix} e_{20} \\ e_{21} \\ e_{22} \\ e_{23} \end{bmatrix}, \qquad \varepsilon_2 \ldots \mathbf{e}_3 = \begin{bmatrix} e_{30} \\ e_{31} \\ e_{32} \\ 0 \end{bmatrix}, \quad \kappa_2 \ldots \mathbf{e}_4 = \begin{bmatrix} e_{40} \\ e_{41} \\ e_{42} \\ e_{43} \end{bmatrix},$$

From the constraints $P_1 \in \varepsilon_1, \kappa_1$ and $P_2 \in \varepsilon_2, \kappa_2$ we get the four equations

$$e_{10}(x_0^2 + x_3^2) + 2e_{11}(x_0y_1 - x_3y_2) + 2e_{12}(x_0y_2 + 2x_3y_1) = 0, \tag{31}$$

$$e_{20}(x_0^2 + x_3^2) + 2e_{21}(x_0y_1 - x_3y_2) + 2e_{22}(x_0y_2 + x_3y_1) + 2e_{23}(x_0y_3 - x_3y_0) + 4\sum_{i=0}^{3} y_i^2 = 0, \tag{32}$$

$$(e_{30} + e_{31}d)x_0^2 + 2e_{32}dx_0x_3 + (e_{30} - e_{31}d)x_3^2 + 2e_{31}(x_0y_1 - x_3y_2) + 2e_{32}(x_0y_2 + x_3y_1) = 0, \tag{33}$$

$$(e_{40}+e_{41}d+d^2)x_0^2+2e_{42}dx_0x_3+(e_{40}-e_{41}d+d^2)x_3^2 \quad +$$
$$2(e_{41}+2d)x_0y_1-2(e_{41}-2d)x_3y_2+2e_{42}(x_0y_2+x_3y_1)+2e_{43}(x_0y_3-x_3y_0)+4\sum_{i=0}^{3}y_i^2 \quad = \quad 0 \qquad (34)$$

To obtain Eq. 28, the system of three equations linear in y_i, Eqs. 31, 33 are selected along with the difference between Eqs. 34 and 32. The resulting coefficients m_{ij} are

$$m_{11}=m_{13}=e_{10},\ m_{12}=m_{14}=0,\ m_{15}=-m_{18}=2e_{11},\ m_{16}=m_{17}=2e_{12},$$

$$m_{21}=e_{30}+e_{31}d,\ m_{22}=2e_{32}d,\ m_{23}=e_{30}-e_{31}d,\ m_{24}=0,\ m_{25}=-m_{28}=2e_{31},\ \ m_{26}=m_{27}=2e_{32},$$

$$m_{31}=e_{40}-e_{20}+e_{41}d+d^2,\ m_{32}=2e_{42}d,\ m_{33}=e_{40}-e_{20}-e_{41}d+d^2,$$
$$m_{34}=2(e_{43}-e_{23}),\ m_{35}=2(e_{41}-e_{21}+2d),\ m_{36}=m_{37}=2(e_{42}-e_{22}),\ m_{38}=2(-e_{41}+e_{21}+2d).$$

With the coefficients m_{ij} one defines the determinants μ_{ijk} and hence the polynomials $\alpha_4(x_0,x_3)$, $\beta_3(x_0,x_3)$, $\gamma_3(x_0,x_3)$, $\delta_2(x_0,x_3)$ according to Eq. 29. Finally, one of the two given PoS constraints, say Eq. 32, is used to produce the univariate octic Eq. 30. In this case the resulting constants $a_1^*,\ldots,b_5^*$ are:

$$a_1^*=a_3^*=e_{20},\ a_2^*=0,\ b_1^*=-b_2^*=e_{21},\ b_3^*=b_4^*=e_{22},\ b_5^*=e_{23}$$

Figure 2 b) shows an example with eight **real** solutions. The eight poses of EE are represented by eight horizontal –they do not appear so in the perspective image– bars whose endpoints P_1, P_2 lie on the two given circles k_1, k_2 representing EE anchor point free motion in FF. This example was solved using the data below:

$$d=5,\ \ \mathbf{e}_1=\begin{bmatrix}0\\1\\0\\0\end{bmatrix},\ \mathbf{e}_2=\begin{bmatrix}-9\\0\\0\\0\end{bmatrix},\ \mathbf{e}_3=\begin{bmatrix}-0.98\\-0.1\\1\\0\end{bmatrix},\ \mathbf{e}_4=\begin{bmatrix}-23.87\\-0.4\\-2\\-0.6\end{bmatrix}$$

As a final example of two legged Schönflies manipulators, the two view drawing in Fig. 3, shows for the first tme how, after considerable further development of the basic design idea, to apply a very simple <u>PP</u>PR leg architecture to achieve a DK model where two points S and T move on two lines $\mathcal{S}$ and $\mathcal{T}$, respectively. Each line is the intersection of a vertical plane and one normal to it. The two basal P-joints on each leg are actuated, possibly in the manner shown. With only PoP constraints, the DK admits two solutions, at most.

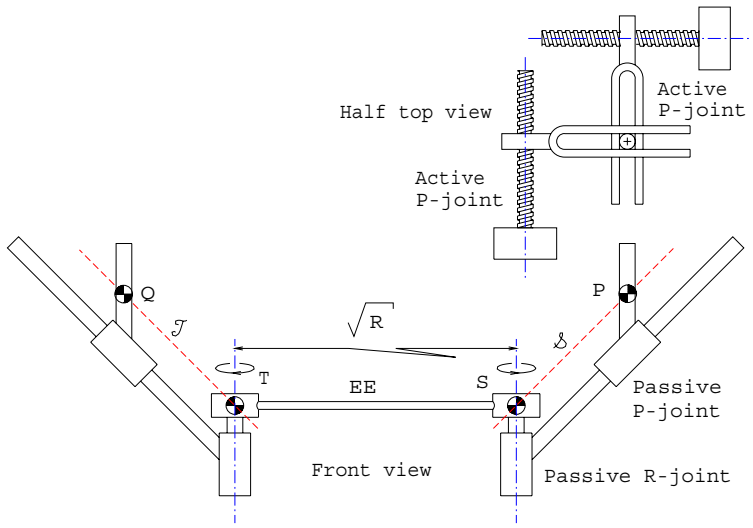

Figure 3: Two Screw Actuators for Double Basal Actuation

4 The Direct Kinematics of the Spherical Double Triangular Manipulator

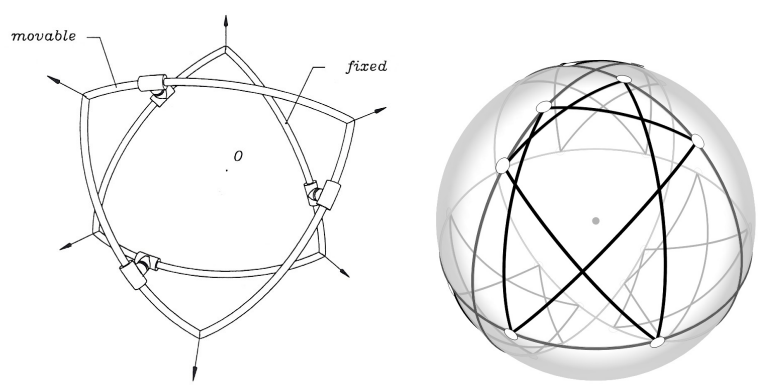

(a) Equilateral Spherical DTM

(b) Example with Eight Real DK Solutions

Figure 4: Spherical Double Triangular Manipulator

Fig. 4, a) shows the mechanical layout of a regular spherical double triangular manipulator (spherical DTM). Keep in mind that the three short legs, each made up of curved sliders and intermediate R-joints, separating the curved rods of FF and EE, make this architecture kinematically equivalent to a classical three-legged RRR spherical parallel manipulator. Notwithstanding apparent similarity to the spatial DTM (see section 5) this one, in contrast, is fully parallel, *i.e.*, has one as opposed to more actuated joints per leg.

Under spherical displacement there are no terms containing y_i in the point transformation Eq. 2:

$$\mathbf{M} = \begin{bmatrix} x_0^2+x_1^2+x_2^2+x_3^2 & 0 & 0 & 0 \\ 0 & x_0^2+x_1^2-x_2^2-x_3^2 & 2(x_1x_2-x_0x_3) & 2(x_1x_3+x_0x_2) \\ 0 & 2(x_1x_2+x_0x_3) & x_0^2-x_1^2+x_2^2-x_3^2 & 2(x_2x_3-x_0x_1) \\ 0 & 2(x_1x_3-x_0x_2) & 2(x_2x_3+x_0x_1) & x_0^2-x_1^2-x_2^2+x_3^2 \end{bmatrix} \tag{35}$$

The DK of the spherical DTM can be reformulated as the following task:

Given a spherical triangle $P_1P_2P_3$ on the unit sphere and three planes $\varepsilon_1, \varepsilon_2, \varepsilon_3$ on the origin (centre of the unit sphere) find a congruent spherical triangle $Q_1Q_2Q_3$ with $Q_i \in \varepsilon_i$.

In other words one has to find all spherical displacements that satisfy the three PoP conditions P_i, ε_i, $i = 1, 2, 3$.

To solve this task one may simplify coefficients by choosing, without loss in generality, the three points P_i and the three planes ε_i, as follows.

$$\mathbf{p}_1 = \begin{bmatrix} 1 \\ 1 \\ 0 \\ 0 \end{bmatrix}, \quad \mathbf{p}_2 = \begin{bmatrix} 1 \\ p_{2,1} \\ p_{2,2} \\ 0 \end{bmatrix}, \quad \mathbf{p}_3 = \begin{bmatrix} 1 \\ p_{3,1} \\ p_{3,2} \\ p_{3,3} \end{bmatrix}$$

and

$$\mathbf{e}_1 = \begin{bmatrix} 0 \\ 1 \\ 0 \\ 0 \end{bmatrix}, \quad \mathbf{e}_2 = \begin{bmatrix} 0 \\ e_{2,1} \\ e_{2,2} \\ 0 \end{bmatrix}, \quad \mathbf{e}_3 = \begin{bmatrix} 0 \\ e_{3,1} \\ e_{3,2} \\ e_{3,3} \end{bmatrix}$$

Then the three planar constraints

$$\mathbf{e}_i^\top \mathbf{M}\, \mathbf{p}_i = 0.$$

have the form

$$\begin{aligned} x_0^2 + x_1^2 - x_2^2 - x_3^2 &= 0 \\ a_{00}x_0^2 + a_{11}x_1^2 + a_{22}x_2^2 + a_{33}x_3^2 + 2a_{03}x_0x_3 + 2a_{12}x_1x_2 &= 0 \\ b_{00}x_0^2 + b_{11}x_1^2 + b_{22}x_2^2 + b_{33}x_3^2 + 2b_{01}x_0x_1 & \\ +2b_{02}x_0x_2 + 2b_{03}x_0x_3 + 2b_{12}x_1x_2 + 2b_{13}x_1x_3 + 2b_{23}x_2x_3 &= 0 \end{aligned} \tag{36}$$

where $\mathbf{M}$ is the matrix Eq. 35 and

$$\begin{aligned} a_{00} = e_{21}p_{21} + e_{22}p_{22},\ \ a_{11} = e_{21}p_{21} - e_{22}p_{22},\ \ a_{22} = -e_{21}p_{21} + e_{22}p_{22},\ \ a_{33} = -e_{21}p_{21} - e_{22}p_{22} \\ a_{03} = e_{22}p_{21} - e_{21}p_{22},\ \ a_{21} = e_{21}p_{22} + e_{22}p_{21} \\ b_{00} = e_{32}p_{32} + e_{31}p_{31} + e_{33}p_{33},\ \ b_{11} = -e_{33}p_{33} + e_{31}p_{31} - e_{32}p_{32},\ \ b_{22} = e_{32}p_{32} - e_{31}p_{31} - e_{33}p_{33} \\ b_{33} = -e_{31}p_{31} - e_{32}p_{32} + e_{33}p_{33},\ \ b_{01} = e_{33}p_{32} - e_{32}p_{33},\ \ b_{02} = e_{31}p_{33} - e_{33}p_{31} \\ b_{03} = e_{32}p_{31} - e_{31}p_{32},\ \ b_{12} = e_{31}p_{32} + e_{32}p_{31},\ \ b_{13} = e_{31}p_{33} + e_{33}p_{31},\ \ b_{23} = e_{32}p_{33} + e_{33}p_{32} \end{aligned} \tag{37}$$

Remark: It is well known that each of the Eqs. 36 represents a Clifford-quadric in a homogeneous three dimensional vector space of Euler parameters x_0, x_1, x_2, x_3. This is a Cayley-Klein space with an elliptic metric based on the absolute null-quadric $\mathcal{M}:\ x_0^2 + x_1^2 + x_2^2 + x_3^2 = 0$. A Clifford-quadric is characterized by the property that its intersection with $\mathcal{M}$ is a skew quadrilateral consisting of two pairs of conjugate complex straight lines. See, for instance, [10].

One may reduce the number of variables from four –three, if dehomogenization is counted– to two with the parametrization shown in Eq. 38.

$$\begin{bmatrix} x_0 \\ x_1 \\ x_2 \\ x_3 \end{bmatrix} = \begin{bmatrix} -1 + uv \\ u + v \\ -1 - uv \\ u - v \end{bmatrix} \tag{38}$$

This substitution in Eqs. 36 nulls the left hand side of the first. The other two, after a little rearrangement, assume the form of Eqs. 39

$$\alpha_2(u) \cdot v^2 + \alpha_1(u) \cdot v + \alpha_0(u) = 0,\ \ \beta_2(u) \cdot v^2 + \beta_1(u) \cdot v + \beta_0(u) = 0 \tag{39}$$

where the coefficients are the following quadratics in u.

$$\begin{aligned} \alpha_2(u) &= 2e_{22}(p_{22}u^2 - 2p_{21}u - p_{22}) \\ \alpha_1(u) &= -4e_{21}p_{22}(u^2 + 1) \end{aligned}$$

$$
\begin{aligned}
\alpha_0(u) &= -2e_{22}(p_{22}u^2 + 2p_{21}u - p_{22}) \\
\beta_2(u) &= -2(e_{31}p_{33} - e_{32}p_{32} - e_{33}p_{31})u^2 - 4(e_{32}p_{31} - e_{33}p_{32})u - 2(e_{31}p_{33} + e_{32}p_{32} + e_{33}p_{31}) \\
\beta_1(u) &= -4(e_{31}p_{32} + e_{32}p_{33})u^2 - 8e_{33}p_{33}u - 4(e_{31}p_{32} - e_{32}p_{33}) \\
\beta_0(u) &= \quad 2(e_{31}p_{33} - e_{32}p_{32} + e_{33}p_{31})u^2 - 4(e_{32}p_{31} + e_{33}p_{32})u + 2(e_{31}p_{33} + e_{32}p_{32} - e_{33}p_{31})
\end{aligned} \tag{40}
$$

An octic in u emerges when v is eliminated between Eqs. 39. A neat dialytic method to do this is given in Eq. 41.

$$
\begin{vmatrix}
\alpha_2(u) & \alpha_1(u) & \alpha_0(u) & 0 \\
0 & \alpha_2(u) & \alpha_1(u) & \alpha_0(u) \\
\beta_2(u) & \beta_1(u) & \beta_0(u) & 0 \\
0 & \beta_2(u) & \beta_1(u) & \beta_0(u)
\end{vmatrix} = 0 \tag{41}
$$

To obtain values of v that correspond to the eight values of u obtained with Eq. 41 consider that a given $u = u_0$ numerically defines all coefficients in Eqs. 39 so these two equations become redundant. Multiplying these, respectively, by $\alpha_2(u_0)$ and $\beta_2(u_0)$ and equating their difference to zero defines $v = v_0$ as Eq. 42.

$$
v = v_0 = \frac{\alpha_0(u_0) \cdot \beta_2(u_0) - \alpha_2(u_0)\beta_0(u_0)}{\alpha_2(u_0) \cdot \beta_1(u_0) - \alpha_1(u_0)\beta_2(u_0)} \tag{42}
$$

Using known pairs of $u = u_0, v = v_0$ in Eq. 38 yields all four x_i for up to eight poses of EE moved to FF via a spherical displacement constrained by three PoP equations.

The diagram in Fig. 4, b) displays an architecture with imposed joint parameters that generates a DK solution with eight assembly modes. So once again an octic univariate is minimal. This example uses three planes, $x = 0, y = 0, z = 0$, upon which three absolute EE points, initially with respective direction numbers $(1, 0, 0), (0.5, 0.48, 0), (0.27, 0.71, 1.64)$, are to be placed. The EE triangle is scalene. It was thus chosen to visually contrast, by its asymmetry, its double placement in each of four octants of the sphere and, of course, to show a case with eight real assembly modes. The division of the FF sphere into eight congruent spherical triangles brings to ones attention that inscribing the EE triangle into any of the other (blank) octants would involve parity reversal of the EE triangle. *I.e.*, exchanging concave and convex surface orientation, like flipping heads and tails in the planar case, is forbidden. Such "solutions" would thus not be valid ones.

5 Spatial Three-Legged Manipulator DK with Three Line Constraints

This is a full mobility, *i.e.*, six dof manipulator. It fits into this category of reduced mobility –or rather reduced complexity– because it is not fully parallel. Its three legs require two actuators each and thus its DK is much easier to solve than, say, Husty's general six-points-on-six-spheres problem [8]. Eq. 1 and six PoP constraints may be used in this case if each given point must satisfy a pair of these, *i.e.*, each pair of planes intersects on one of the given lines. The spatial DTM can be modelled in this way. The following three points P_i, $i = 1, 2, 3$ and six planes ε_i, $i = 1, \ldots, 6$, the latter to be taken in successive pairs to represent lines, l_i, are without loss in generality chosen to simplify equation coefficients and, more important, to obtain a system that admits a reparametrization approach to solution quite similar to that used, in section **4**, for the DK of three-legged spherical robots.

$$\mathbf{p}_1 = \begin{bmatrix} 1 \\ 0 \\ 0 \\ 0 \end{bmatrix}, \quad \mathbf{p}_2 = \begin{bmatrix} 1 \\ p_{21} \\ 0 \\ 0 \end{bmatrix}, \quad \mathbf{p}_3 = \begin{bmatrix} 1 \\ p_{31} \\ p_{32} \\ 0 \end{bmatrix}$$

$$l_1 \quad \ldots \quad \mathbf{e}_1 = \begin{bmatrix} 0 \\ 0 \\ 1 \\ 0 \end{bmatrix}, \quad \mathbf{e}_2 = \begin{bmatrix} 0 \\ 0 \\ 0 \\ 1 \end{bmatrix}$$

$$l_2 \quad \ldots \quad \mathbf{e}_3 = \begin{bmatrix} 1 \\ 0 \\ 0 \\ e_{33} \end{bmatrix}, \quad \mathbf{e}_4 = \begin{bmatrix} 0 \\ e_{41} \\ e_{42} \\ 0 \end{bmatrix}$$

$$l_3 \quad \ldots \quad \mathbf{e}_5 = \begin{bmatrix} 1 \\ e_{51} \\ e_{52} \\ 0 \end{bmatrix}, \quad \mathbf{e}_6 = \begin{bmatrix} 1 \\ 0 \\ e_{62} \\ e_{63} \end{bmatrix}$$

This means that the first line l_1 is the x-axis of the coordinate frame in FF, that the z-axis of that coordinate system is the common perpendicular of l_1, l_2 and that one of the two planes fixing the third line l_3 is parallel to z and the other one is parallel to x.

Now the three terms, that contain y_i, $i = 0, 1, 2, 3$ in the first column of the matrix in Eq. 2, are replaced by the translational components t_i, $i = 1, 2, 3$, according to Eq. 5 and, after carrying out the six transformations with Eq. 1 to get $\mathbf{q}_i$, the products $\mathbf{e}_{1,2}^\top \mathbf{q}_1$, $\mathbf{e}_{3,4}^\top \mathbf{q}_2$, $\mathbf{e}_{5,6}^\top \mathbf{q}_3$ provide six constraint equations. Notice that the original eight homogeneous Study parameters have been reduced to seven by the replacement of all terms containing $y_{0,1,2,3}$ with $t_{1,2,3}$ so these six equations are sufficient when the new system is dehomogenized by setting $x_0 = 1$. The first two, that express $P_1 \in l_1$, yield $t_2 = 0$ and $t_3 = 0$. Substituting this result into the rest leaves only t_1, in two of the remaining four (Eqs. 43,. . . , 46).

$$x_0^2 + x_1^2 + x_2^2 + x_3^2 - 2e_{33}p_{21}(x_0x_2 - x_1x_3) = 0 \tag{43}$$

$$p_{21}[e_{41}(x_0^2 + x_1^2 - x_2^2 - x_3^2) + 2e_{42}(x_0x_3 + x_1x_2)] + e_{41}t_1 = 0 \tag{44}$$

$$\begin{aligned} (1 + e_{51}p_{31} + e_{52}p_{32})x_0^2 + (1 + e_{51}p_{31} - e_{52}p_{32})x_1^2 &+ \\ (1 - e_{51}p_{31} + e_{52}p_{32})x_2^2 + (1 - e_{51}p_{31} - e_{52}p_{32})x_3^2 &- \\ 2(e_{51}p_{32} - e_{52}p_{31})x_0x_3 + 2(e_{51}p_{32} + e_{52}p_{31})x_1x_2 + e_{51}t_1 &= 0 \end{aligned} \tag{45}$$

$$\begin{aligned} (1 + e_{62}p_{32})x_0^2 + (1 - e_{62}p_{32})x_1^2 + (1 + e_{62}p_{32})x_2^2 + (1 - e_{62}p_{32})x_3^2 \\ +2e_{63}p_{32}(x_0x_1 + x_2x_3) - 2e_{63}p_{31}(x_0x_2 - x_1x_3) + 2e_{62}p_{31}(x_0x_3 + x_1x_2) &= 0 \end{aligned} \tag{46}$$

Next, t_1 is eliminated from Eqs. 44, 45:

$$\begin{aligned} e_{41}[1 - e_{51}(p_{21} - p_{31}) + e_{52}p_{32}]x_0^2 + e_{41}[1 - e_{51}(p_{21} - p_{31}) - e_{52}p_{32}]x_1^2 &+ \\ e_{41}[1 + e_{51}(p_{21} - p_{31}) + e_{52}p_{32}]x_2^2 + e_{41}(1 + e_{51}(p_{21} - p_{31}) - e_{52}p_{32}]x_3^2 &- \\ 2(e_{41}e_{51}p_{32} - e_{41}e_{52}p_{31} + e_{42}e_{51}p_{21})x_0x_3 + 2(e_{41}e_{51}p_{32} + e_{41}e_{52}p_{31} - e_{42}e_{51}p_{21})x_1x_2 &= 0 \end{aligned} \tag{47}$$

With Eqs. 43, 47, 46 we have obtained a system of three homogeneous quadratic equations in x_0, x_1, x_2, x_3. The coefficients of this system are shown compressed in Eq. 48 to make the final steps easier to follow.

$$x_0^2 + x_1^2 + x_2^2 + x_3^2 - 2k(x_0x_2 - x_1x_3) = 0$$

$$
\begin{aligned}
a_0x_0^2 + a_1x_1^2 + a_2x_2^2 + a_3x_3^2 - 2a_4x_0x_3 + 2a_5x_1x_2 &= 0 \\
b_0(x_0^2 + x_2^2) + b_1(x_1^2 + x_3^2) + 2b_2(x_0x_1 + x_2x_3) - 2b_3(x_0x_2 - x_1x_3) + 2b_4(x_0x_3 + x_1x_2) &= 0
\end{aligned} \tag{48}
$$

Now the reparametrization technique introduced in section **4** is applied. Eqs. 41 and 42 are applied exactly as before, except for parametric details and the definition of the quadratic polynomials $\alpha_2(u), \ldots, \beta_0(u)$, described below (Eqs. 49, 50).

$$
\begin{bmatrix} x_0 \\ x_1 \\ x_2 \\ x_3 \end{bmatrix} = \begin{bmatrix} k - j + (k+j)uv \\ (j-k)u + (j+k)v \\ 1 + uv \\ u - v \end{bmatrix}, \quad l = \sqrt{k^2 - 1} \tag{49}
$$

$$
\left.
\begin{aligned}
\alpha_2(u) &= [2a_0k(k+l) - a_0 + a_2]\,u^2 + 2(a_4 + a_5)(k+l)\,u + 2a_1k(k+l) - a_1 + a_3 \\
\alpha_1(u) &= -2[a_4(k+l) + a_5(k-l)]\,u^2 + 2(a_0 - a_1 + a_2 - a_3)\,u + 2[a_5(k+l) + a_4(k-l)] \\
\alpha_0(u) &= [2a_1k(k-l) - a_1 + a_3]\,u^2 - 2(a_4 + a_5)(k-l)\,u + 2a_0k(k-l) - a_0 + a_2 \\
\beta_2(u) &= 2(b_0k - b_3)(k+l)\,u^2 - 4b_2[1 - k(k+l)]u + 2(b_1k - b_3)(k+l) \\
\beta_1(u) &= 4b_4l\,u^2 + 4(b_0 - b_1)\,u + 4b_4l \\
\beta_0(u) &= 2(b_1k - b_3)(k-l)\,u^2 + 4b_2[1 - k(k-l)]\,u + 2(b_0k - b_3)(k-l)
\end{aligned}
\right\} \tag{50}
$$

Again the solutions of an octic univariate in u, produced with the determinant of Eq. 41, are back substituted into Eq. 42.

5.1 The Spatial Double Triangular Manipulator

A mechanical realization of the 3-points-on-3-lines paradigm is the so called spatial double triangular manipulator (spatial DTM) as introduced in [6].

Fig. 5(a), shows two frames, each consisting of three skew lines. These are connected by three short $\underline{C}$RC legs where C is a cylindrical joint. Both dof of the ones on FF are actuated. The centres of the three unactuated C-joints become the three points in FF upon which the three pairs of planes, that intersect on the three lines in EE, are to be placed. These six planes should be transformed by the procedure outlined above.

The sample solution in Fig. 5(b), revealing eight real assembly modes, is an inversion, *i.e.*, the three points in EE, $(0,0,0), (5,0,0), (\frac{5}{2}, \frac{5\sqrt{3}}{2}, 0)$, were placed on the respective plane pairs $y = 0 \cap z = 0, x = 0 \cap z = 1, x = 1 \cap y = 1$. Thus the octic polynomial (see above) is demonstrated to be minimal.

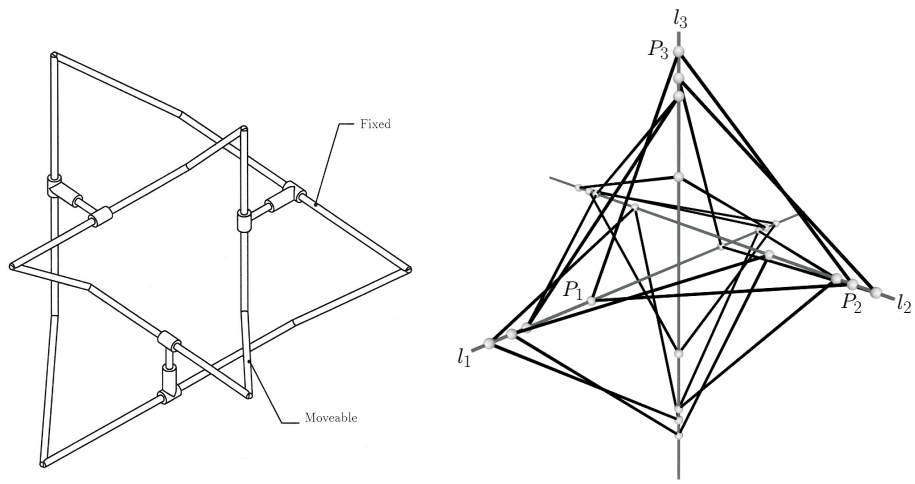

(a) Equilateral Spatial DTM (b) Example for Eight Real Solutions of the DK

Figure 5: Spatial Double Triangular Manipulator

6 Conclusion

Direct kinematic problems for a wide variety of parallel manipulators have been solved in a unified fashion using *point* kinematic mapping. All cases involved the writing of constraint equations that place a number of points on corresponding surfaces, not always in the same number. However once one begins to look at problems in this way the writing of a sufficient set of such equations is made a lot easier. These equations sets were then solved by introducing, or rather resurrecting in a more general engineering context, some not so widely known algebraic techniques and thereby obtaining some new results.

- Reducing the PoS constraint to a quadric in Study parameters by intersecting the original quartic with the Study quadric and confining the transformed point P to Euclidean space,
- Reduction of a partial set of constraints to a one parameter motion trajectory of the last point that is then intersected with the remaining surface,
- Reparametrization to reduce the number of variables and constraint equations and
- Neatly extracting an octic univariate from a pair of simultaneous bivariate quartics, like the system Eq. 39 wherein there are no cubic or quartic variable terms, as a simple 4×4 determinant, Eq. 41, and exposing a linear backsubstitution, Eq. 42, to obtain corresponding values of the other variable.
- Revealing for the first time an octic univariate polynomial and eight real DK solutions for the spherical DTM.

- Revealing for the first time an octic univariate polynomial and eight real DK solutions for the spatial DTM.

Almost all cases examined pertained to manipulators of less than six dof though there was one fully mobile example, the spatial DTM, albeit a simplified problem because it was not fully parallel, *i.e.*, had more than one actuated joint per leg.

Acknowledgement Support by *Natural Sciences and Engineering Research Canada "Discovery"* grant.

References

[1] J. Angeles, S. Caro, W. Khan, A. Morozov, Kinetostatic design of an innovative schönflies motion generator. Journal of Mechanical Engineering Science 220 (2008) 935-943

[2] W. Blaschke, Kinematik u. Quaternionen, Deutscher Verlag der Wissenschaften, Berlin, 1960

[3] O. Bottema, B. Roth Theoretical Kinematics, Dover Publications, 1990.

[4] R. Clavel, DELTA, a fast robot with parallel architecture. 18th International Symposium on Industrial Robots, Lausanne, IFS Publications, 88-04, (1988) 91-100

[5] H.R.M. Daniali, P.J. Zsombor-Murray, J. Angeles, The kinematics of 3-dof planar and spherical double-triangular manipulators. Computational Kinemtics ISBN 0-7923-2585-0 (1993) 153-164

[6] H.R.M. Daniali, Contribution to the synthesis of parallel manipulators. Ph.D. Thesis, McGill University (1995)

[7] J.-F. Gauthier, Contributions to the optimum design of Schönflies motion generators. M.Eng. Thesis, McGill University (2008)

[8] M. Husty, An Algorithm for solving the direct kinematics of general Stewart-Gough platforms. Mechanism and Machine Theory 31 (4) (1996) 365-380

[9] M. Husty, M. Pfurner, H.-P. Schröcker, A new and efficient algorithm for the inverse kinematics of a general serial 6R manipulator. Mechanism and Machine Theory 42 (1) (2007) 66-81

[10] H.R. Müller, Sphärische Kinematik, Deutscher Verlag der Wissenschaften, Berlin (1962).

[11] V. Nabat, M. Rodriguez, O. Company, F. Pierrot, P. Dauchez, P. Very fast Schoenflies motion generator. IEEE Publication 0-7803-9484-4/05 (2005) 365-370

[12] E. Study, Geometrie der Dynamen, B.G. Teubner, Leipzig (1903)

[13] H. Vogler, H. Vorwort des Herausgebers – Bemerkungen zu einem Satz vom W. Blaschke und zur Methode von Borel-Bricard. Grazer Mathematische Berichte (352) (2008) 1-16

[14] K. Zhou, D. Mao, Z. Tao, (2002) Kinematic analysis and application research on a high-speed travelling double four-rod spatial parallel mechanism. International Journal of Advanced Manufacturing Technology 19 (12) (2002) 873-878

[15] P.J. Zsombor-Murray, Kinematic mapping and kinematics of some parallel manipulators. Proceedings Second International Workshop on Fundamental Issues and Future Research Directions for Parallel Mechanisms and Manipulators, Montpellier, 08-10 Montpellier (2008) 41-48

Figure Captions

Figure 1:- (General) Various Leg Architechtures in a Variety of Schönflies Parallel Manipulator Contexts

Figure 1(a):- (Left) 4- or 2-Legged Schönflies Manipulator with $\underline{R}$IIIIR Legs

Figure 1(b):- (Right) 4-Legged $\underline{P}$RIIR Schönflies Robot

Figure 2:- (General) Two Legged Schönflies Manipulator

Figure 2(a):- (Left) Planetary Gearbox Drive for Double Basal Actuation

Figure 2(b):- (Right) Example with Eight Real DK Solutions

Figure 3:- Two Screw Actuators for Double Basal Actuation

Figure 4:- (General) Spherical Double Triangular Manipulator

Figure 4(a):- (Left) Equilateral Spherical DTM

Figure 4(b):- (Right) Example with Eight Real DK Solutions

Figure 5:- (General) Spatial Double Triangular Manipulator

Figure 5(a):- (Left) Equilateral Spatial DTM

Figure 5(b):- (Right) Example with Eight Real DK Solution

Figures, Separate, in Sequence

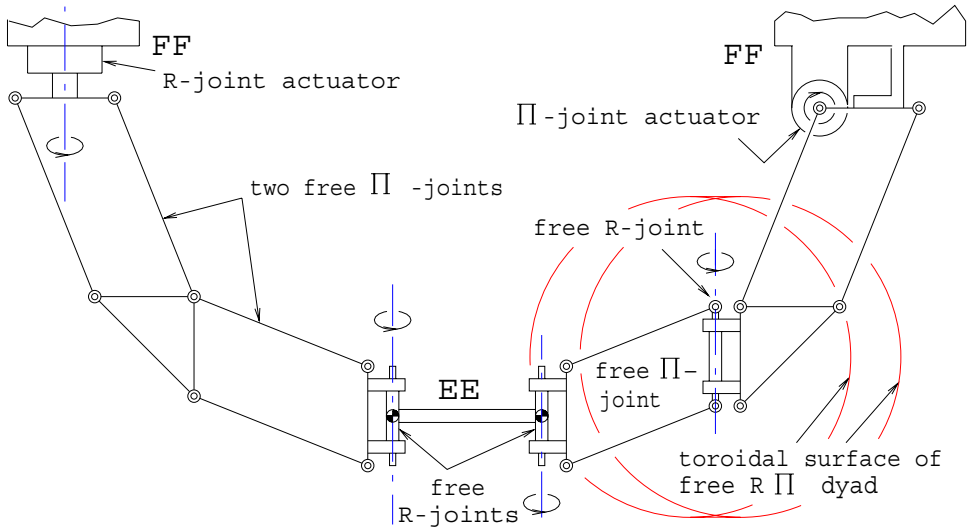

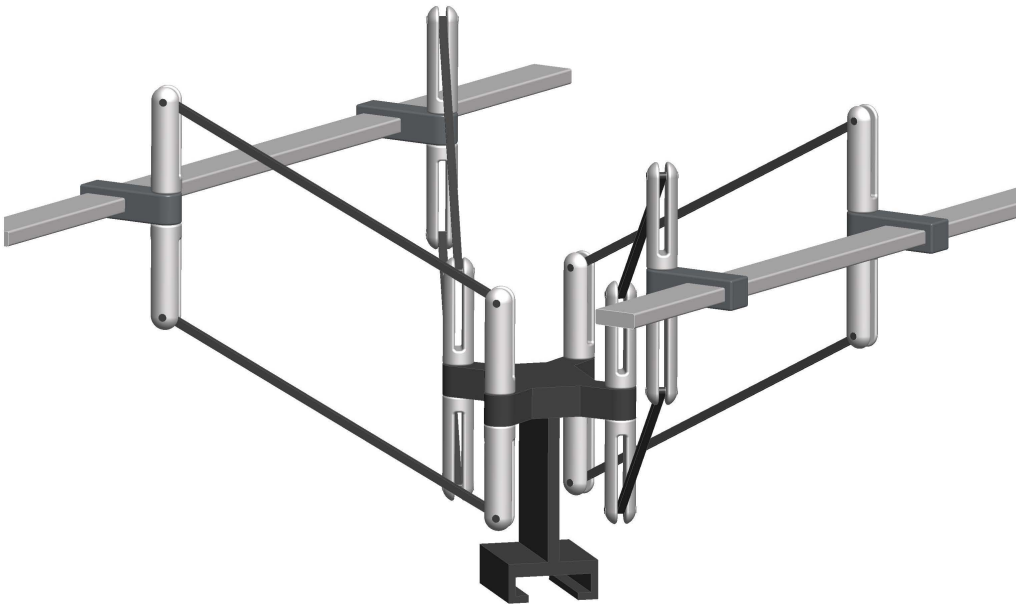

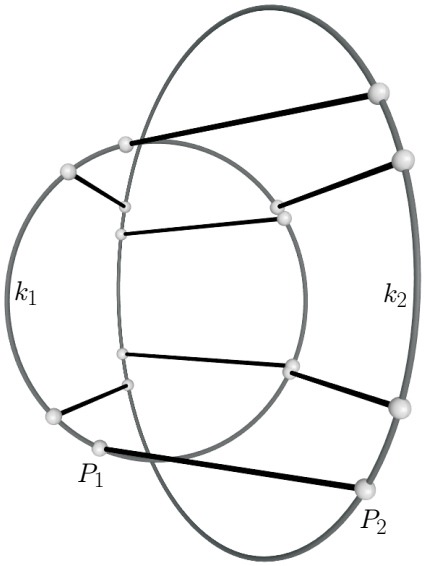
k_1
k_2
P_1
P_2

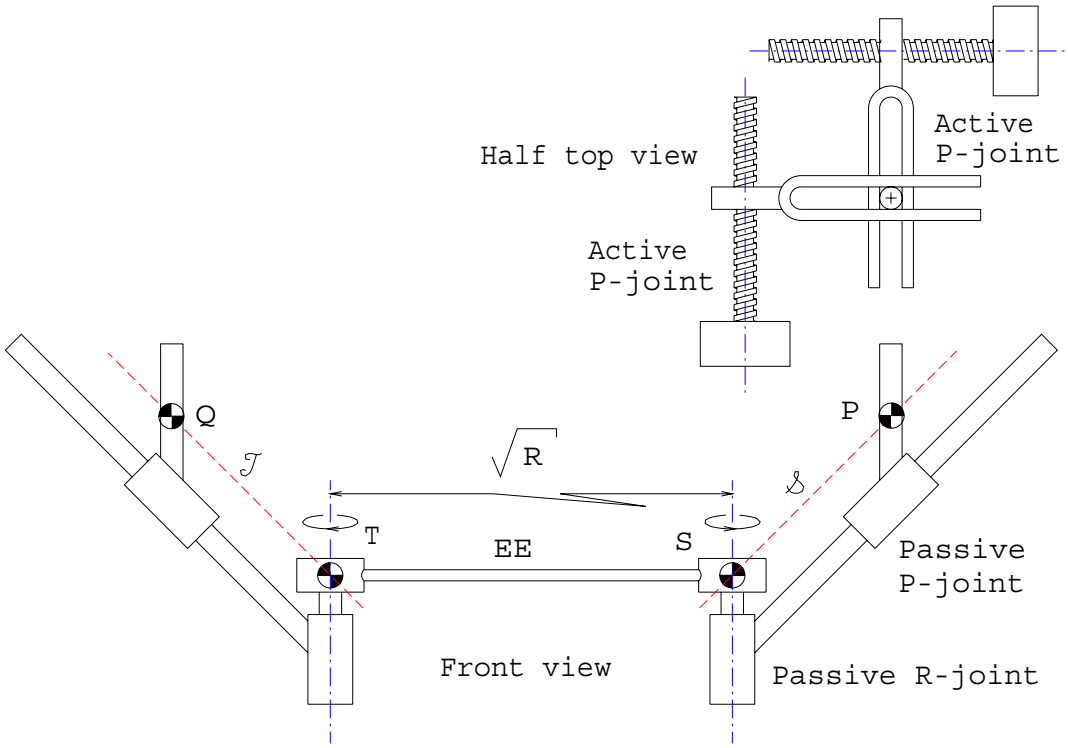
Half top view
Active
P-joint
Active
P-joint
Q
P
$\mathcal{T}$
$\sqrt{R}$
$\mathcal{S}$
T
EE
S
Passive
P-joint
Front view
Passive R-joint

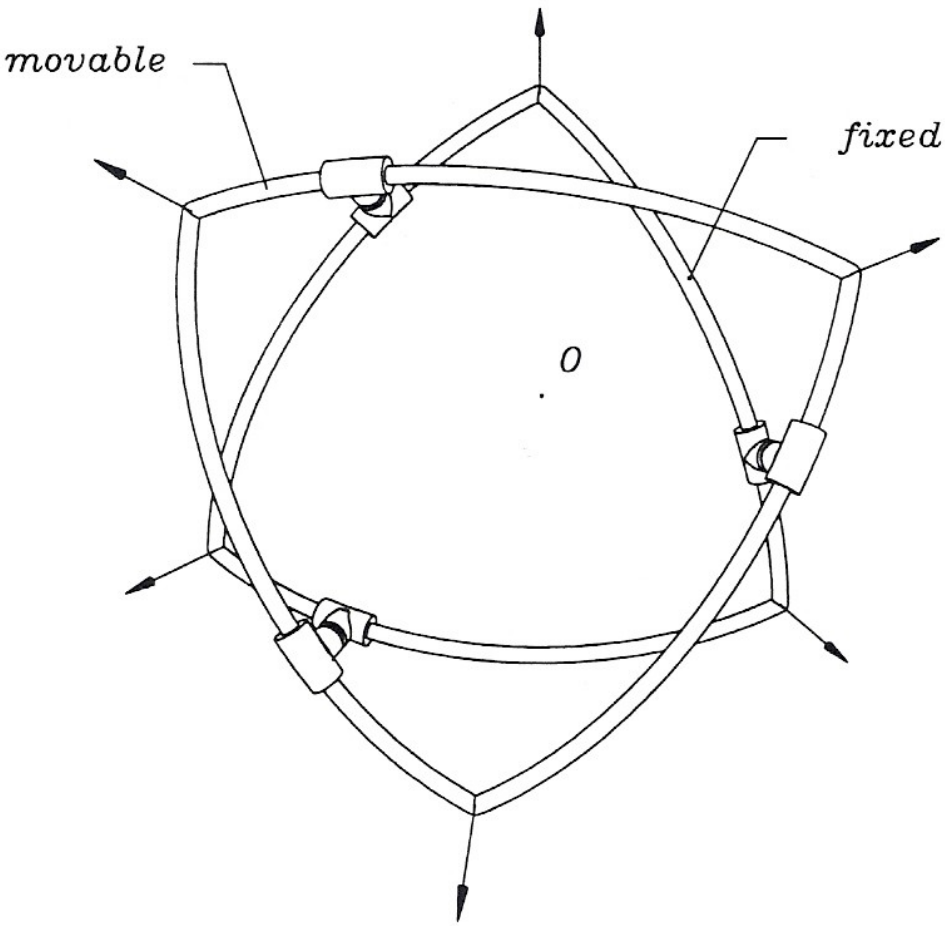
movable
fixed
O

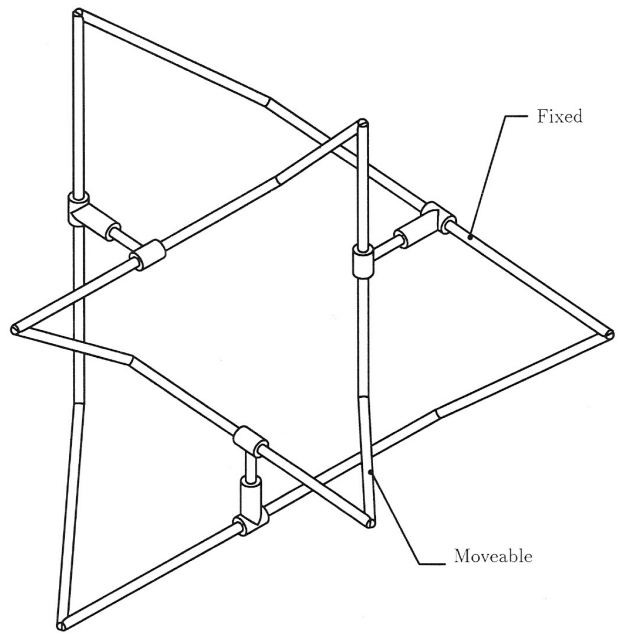
Fixed
Moveable

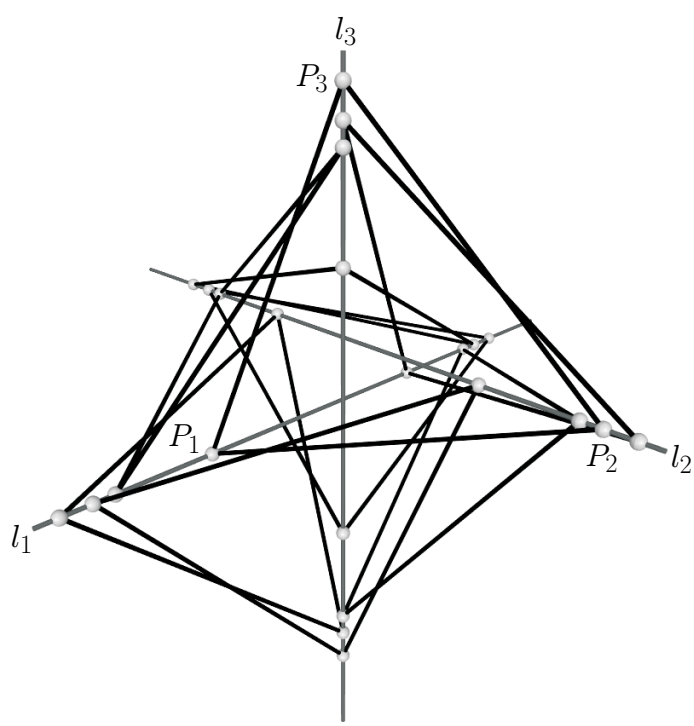
l_3
P_3
P_1
P_2
l_2
l_1