MECH 289
Design Graphics
Design Graphics Project '08

March 20, 2008

1 Introduction

This year's design project is different from either the design and build, partly from catalogued mechanical components, partly from standard metallic stock, an adaptable, 4:1 speed reduction, skewed shaft bevel gear transmission assigned in 2006. It is also quite different from the "reverse engineering" of a 13-component, bronze $\frac{1}{2}$" globe valve with a couple of interesting, maybe complicated, castings.

- You are to present, like in the previous two years, a drawing collage of everything from freehand schematics and idea sketches to certain detail drawings pertaining to how you intend to construct the building wall-and-window test cell high capacity air distribution system.
- The primary intent of your project is to investigate and illustrate ways in which the stainless steel pipe, elbow, tee and butterfly valve system might have been suitably configured at much lower cost than that supplied to the Austrian new building products testing facility in Graz by a firm that designs and assembles paper manufacturing machinery.
- In this case a headbox pulp slurry handling network was adapted without noticeable relaxation of original requirements to transport the dense, solid-laden slurry as compared to air handling in the building test cell.

2 Prototype Existing System

Examine Fig. 1. There are a number of features to note.

- The number of elbows, tees and butterfly valves
- The size; it's in the approximate pipe diameter range of 700-800mm
- The way in which the ducts were welded together, including the the join between the "blank" and "through" tee legs
- The hinge arrangement of the butterfly valve flap; a rod goes into a socket at the bottom; at the top the rod goes through into a bushing sleeve, protrudes out of the top and has a keyway to accept either worm gear (motorized) or lever arm (manual) actuation; we don't know what the finished installation in Graz will have; it's assumed it will be automated
- The flanges on the valve; they have scallops rather than through holes like the flanges welded onto *some* of the elbows and tees where they meet a valve; all other tee, elbow and, presumable, straight pipe joins are welded; scallops permit the valve, *viz.*, its actuating rod to be installed pointing in any radial direction consistent with the number of holes/scallops

- The inclined openings are at 45°; that includes the attached elbow in the foreground
- If I think of any other pertinent features that one can glean from the photo they'll be inserted later

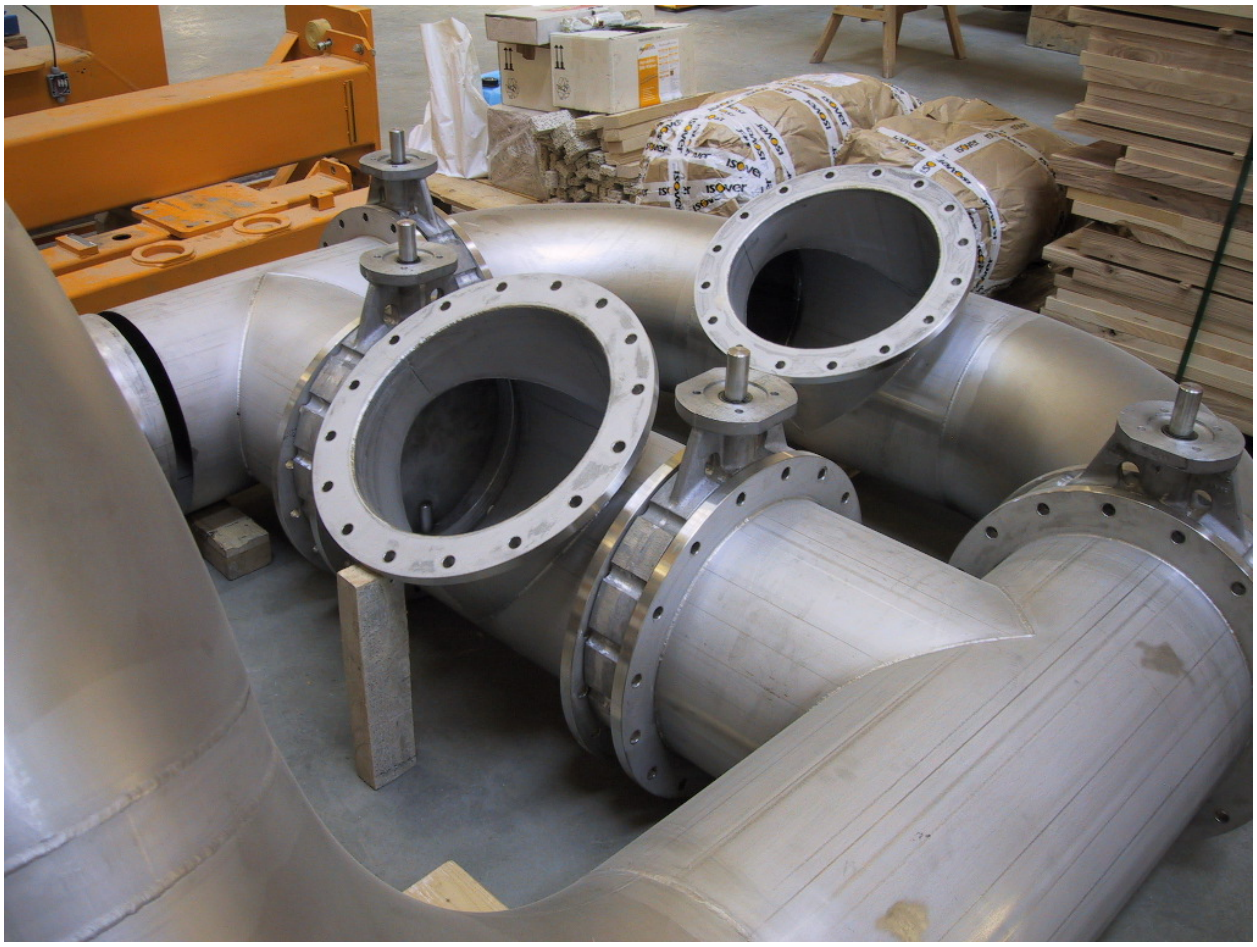

Figure 1: Stainless Steel System as Supplied in the Process of Assembly

3 Layout and Piping

Where does one start? At the beginning, naturally. Make a layout as per guiding examples in Figs. 2,3,4. These illustrations were taken from *my* graphics book that was bought in September 1953 for $13. In today's funds that's about ×15 or ×20.

3.1 Fig. 2

Schematic representations, like maps in the *Métro*, are intended to convey topological, not geometric information and therefore need not be to scale but it helps if the schematic is also being used to design a system like in your case. Notice that dimensions locate virtually everything by

concentrating on key centre-to-centre distances. Angularly offset pipe runs are are specified almost as easily as ones laid out in rectangular grid. Notice the “up” elbow in the lower left corner. The dot in the circle conveys this information. If it were “down” there would be no dot but a radial line would extend from upper circumference to centre of circle. Many other icons identify various components. You’ll have to find the symbol for ”butterfly valve” yourself. Even changes of pipe size are clearly indicated. Identify the one here.

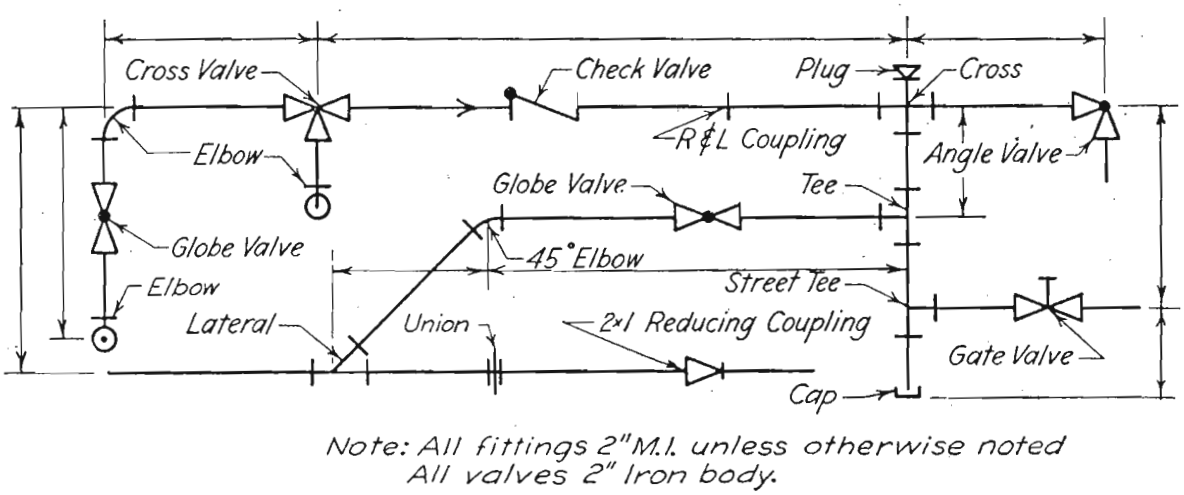

Fig. 25.10. Piping drawing, diagrammatic.

Figure 2: Showing Various Components

3.2 Fig. 3

This illustration shows three ways to present piping layout in three dimensions. On the left one sees a projective matched pair of top and front (or side, maybe) views. In the middle a *development* is shown. The planes of pipe runs are folded out flat like a cardboard box before it is glued up into shape. It makes dimensioning clearer but it may be hard to map back into three dimensions without additional information. Finally, on the right, an (pseudo-) isometric pictorial is shown. This is often a good way to to convey spatial as well as component and dimensional information. It may get difficult if the piping runs are in any-which-way directions.

3.3 Fig. 4

This drawing shows that it is possible to build a pretty complicated process plant using a pictorial (pseudo-isometric) schematic layout scheme. Study this diagram carefully, together with the previous two, and you should have little trouble doing yours. Remember to start with key radial pipe dimensions and work up the centre-to-centre length dimensions from these.

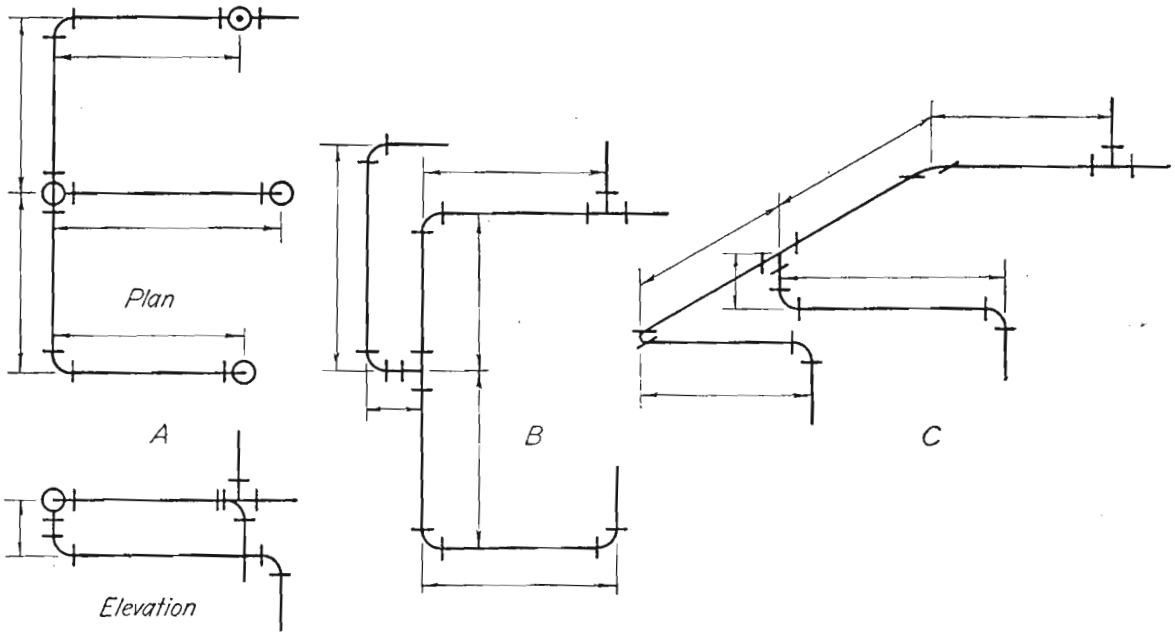

Fig. 25.11. Piping in orthographic, developed, and pictorial views (diagrammatic).

Figure 3: Three Ways to Present Schematics

4 Towards Details

Detail drawings are drawings of individual mechanical elements that contain all necessary for the production and/or manufacture of that specific part. These drawings contain not only all geometric shape and dimensional information but also special procedures like for processes, constraints and qualities like welds, (geometric) tolerancing, heat treatment, required finish of (some) surfaces, *etc.* A bill of materials and identification/indexing system with title block is included. Long before one gets to the stage of producing details certain design sketches are produced. Your piping layout will be one of these. Ultimately it would be redone and provided with a bill of materials, border and title block, reappearing as one of the assembly drawings. In your case it would be the general assembly; the "root" of the "tree" of all formal graphical information (drawings) that fully describes the system to be produced. An important design sketch, one that will be inevitably included in your final presentation, will be that of the butterfly valve. An example has been partly "worked up" in Fig. 5.

Notice that this subassembly consists of the ring, flap, bottom and top bearing rods, bushings, with thrust collars, for the bearings, socket-head cap screws ("Allen" machine screw), and washers. Details, if produced, would only include the ring, flap, rods and, possibly, bushings if these require machining. Screws and washers are (almost) always "bought" items and appear in the assembly drawing and are listed in its bill of materials. Notice, also, that enough size and proportioning information is provided in the design sketch to enable the drafts-creature to make up the details and assembly. A bit less elaborate than Fig. 5, Fig. 6 shows a flanged, smoothly curved elbow that

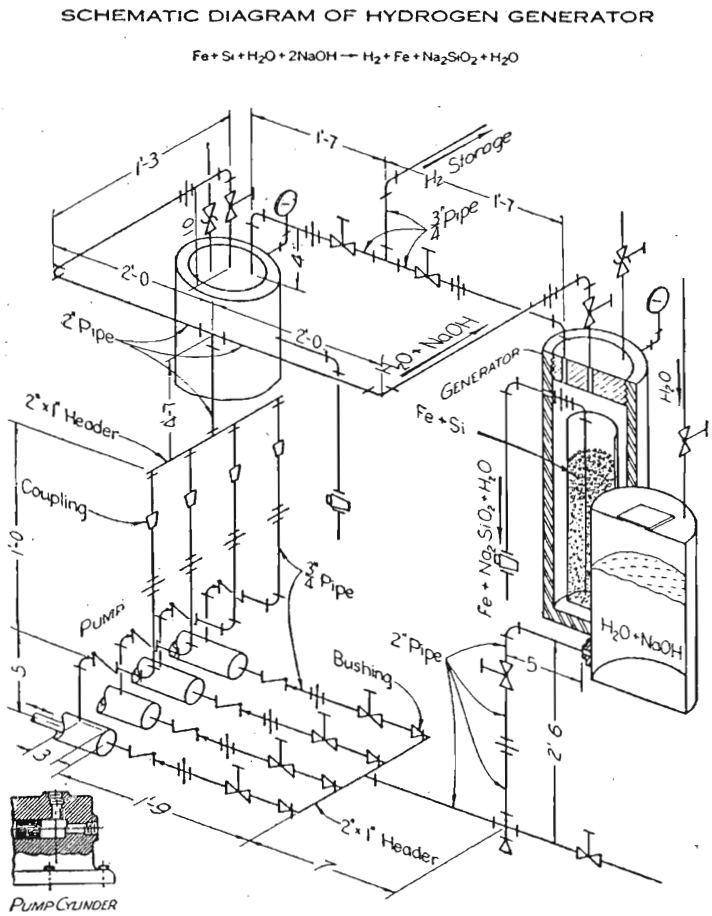

Fig. 25.12. Hydrogen generator.

Figure 4: Even a Complicated System Can Be "Schematicked"

you may choose to have extruded from mild steel or aluminum tube, cast or molded from metal or plastic. Other ways to make it might include laying up using mesh or random fibre reinforced plastic or some cellulose product, possibly recycled waste, or even glass reinforced concrete. If you choose to go the route of connecting sections of straight tube, an example is shown on the left. This could, *e.g.*, be glued together sections of "Sonotube" or welded sections of straight tube.

5 Auxiliary Information on Products and Processes

The last four pieces of information were all picked off the web and include the following items. They're put at the end because it's hard to work the text around them when they're presented near full size.

- Plastic, fully assembled butterfly valves, Fig. 7, are available in pretty big sizes and may suit unless, if and when you dig deeper, you find the price enough to scare you off. Remember one of our goals is to provide satisfaction at a much lower price.

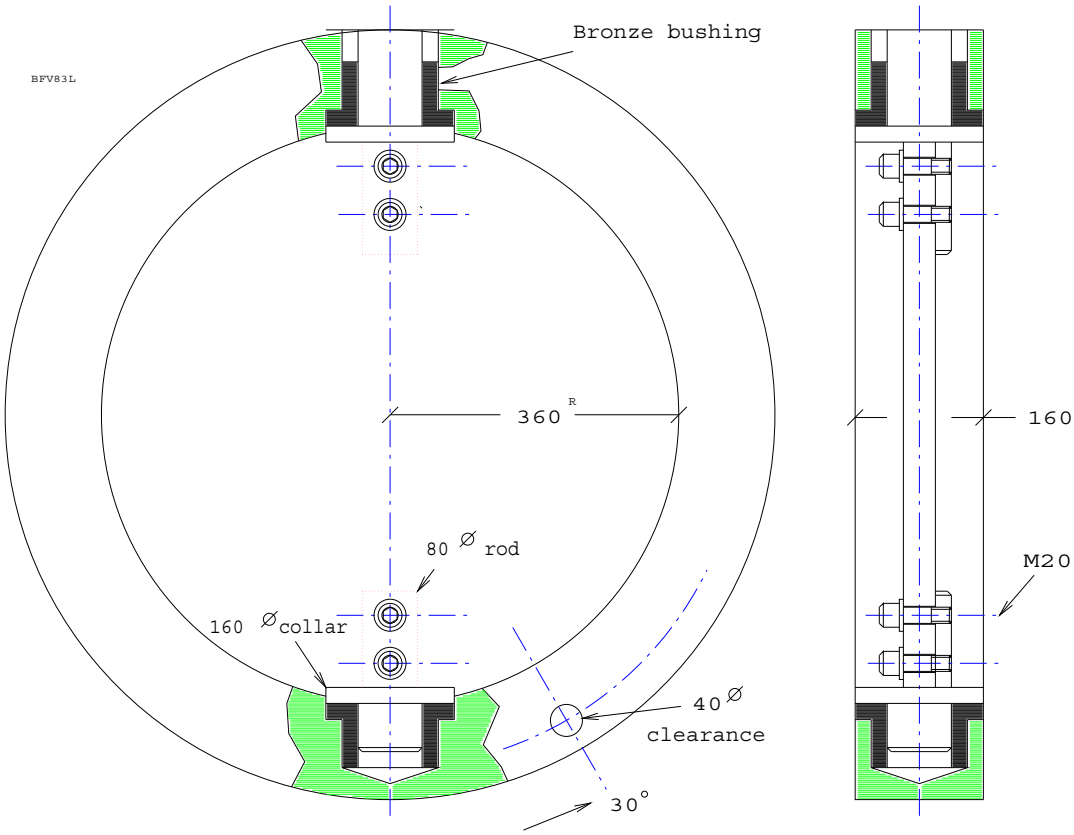

Figure 5: Two View Sketch of Valve with Sections

- Glass reinforced concrete (GRC), described in Fig. 8, can be laid up on a not-too-coarse steel mesh. Unreinforced GRC is about 10% as strong as steel. Zinc castings and lots of industrial plastics are no stronger. If you go this route show some work on the form. If you plan to make elbows and tees this way you can still use steel and cardboard straight runs though Fig. 1 doesn't show much of these.

- Cardboard "Sonotube", Fig. 9, is used to cast concrete columns, on site, for building construction. They must be cheap because they're stripped and discarded when the concrete sets. I've retrieved a particularly high quality tube. It is lined with a Saran-Wrap-like substance for ease of concrete release and to leave a stone-smooth finish. To make tees and elbows you will have to find the necessary adhesives for joining and attaching flanges, the latter being of metal, most probably.

- The last product is plastic sewer pipe that must adhesive-seal properly and withstand being buried. So it should be quite strong enough. If you really luck out you will be able find all the right elbows and tees that are needed. These must be adapted to the butterfly valves of course. This item, because it is a multi-page document, is not included as a figure but as

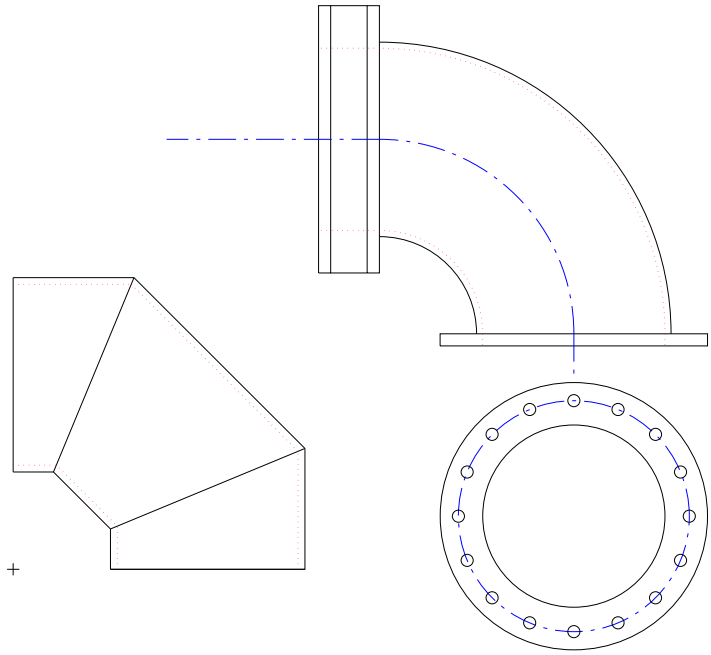

Figure 6: Elbow Ideas

an appended file.

6 Deliverables

Look at the examples of the gear-box from 2006 and the small globe-valve from 2007 in the corridor outside my office. That's the sort of presentation poster that will be required from you on 08-04-11. Don't forget a nice, complete solid model, maybe with appropriate cutaways, regardless of the implementation scheme you choose. The dimensioned piping schematic is also required but it can be quite small and still contain all necessary information. Anywhere you used an unconventional product or process, you can illustrate it with "stolen" pictures and some text. However keep that down to a level to maintain your presentation in the context of *Design Graphics* which is, after all, the name of the course.

6.1 Qualifier

This is a dynamic document and therefore subject to change. I may decide to add clarifications. If if you ask questions that I feel require general answers these will be posted in this document. Look at the date under the title on the first page.

(MECH289)DGP7W71o.tex

Products BUTTERFLY VALVES

These highly versatile valves can be used for simple on/off service but also for processes requiring precise throttling. End-of-line installation of the lugged version allows for downstream piping disassembly with the upstream system still under pressure. The extensive size range and material availability make them applicable in a wide range of applications. With simple, direct mounting for actuation, automated process control can be easily achieved.

- FK Series Butterfly Valves
- FK Series Lugged Butterfly Valves
- FE Series Butterfly Valves

For complete product and submittal data packages for each of our valves please register and visit our Technical Library.

» More Information Form
» Tech Library

» Case Studies

» » Terms and Conditions of Sales

Product News : IPEX launches Plenumline - Acid Waste Piping System for use in Severe Conditions

Figure 7: For the Chemical Processing Industry

What is Glass Reinforced Concrete

BCM Glass Reinforced Concrete (GRC) is a thin section concrete that uses Alkali Resistant glass fibres for reinforcement as opposed to traditional steel. The fact that the fibres will not rust like steel means that there is no real requirement for “cover” and no problems associated with the lack of it. As such it is possible to make lightweight elements that have impressive structural qualities yet save up around 65-75% of the weight of a solid unit. BCM have been making “quality assured” GRC since the early 1980’s

How Strong Is GRC?

The table on the left gives typical figures for the mechanical properties of BCM GRC. As can be seen, the compressive strengths are better than normal concrete, the impact strengths are good, but the real benefits are gained from the fact that GRC functions in bending. This enables designers to make strong hollow lightweight components.

Property	Hand or Machine GRC	Vibration Cast Premix GRC
Glassfibre Content by Weight of Mix	5%	3%
Bending:		
Ultimate Strength (Modulus of Rupture - MOR) MPa	20-30	10-14
Elastic Limit (Limit of Proportionality - LOP) MPa	7-11	5-8
Tension:		
Ultimate Strength (Ultimate Tensile Strength - UTS) MPa	8-11	4-7
Elastic Limit (Bend Over Point - BOP) MPa	5-7	4-6
Shear:		
Interlaminar Shear Strength MPa	3-5	NA
In-plane Shear Strength MPa	8-11	4-7
Compressive Strength MPa	50-80	40-60
Impact Strength kJ/m2	10-25	10-15
Elastic Modulus GPa	10-20	10-20
Strain to Failure %	0.6-1.2	0.1-0.2
Dry Density Tonne/m3	1.9-2.1	1.8-2.0

Figure 8: Glass Reinforced Concrete Specifications

Figure 9: A Cardboard Solution

Royal Pipe Systems™

MUNICIPAL

Pipe & Fittings

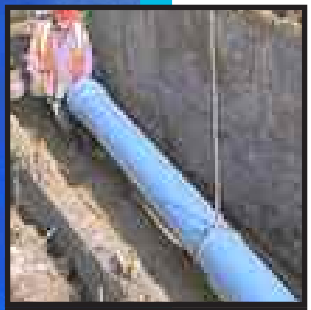

ROYAL GROUP TECHNOLOGIES LIMITED

Royal Group Technologies Limited is one of North America's largest extruders of polyvinyl chloride (PVC) building products. Royal Group is a publicly traded company listed on the Toronto and New York stock exchanges, operating over 100 owned or joint venture businesses. Our corporate head office is located in Woodbridge, Ontario with operating facilities around the world. Our manufacturing facilities are located primarily in Canada and the USA, with locations in Europe, Asia and South America.

Royal Group Technologies Limited designs, creates and produces quality plastic products for home improvement, consumer and construction markets. Some of our products include, custom window profiles, pipe, fencing, decking, outdoor furniture, window coverings and building systems.

ROYAL PIPE SYSTEMS

Royal Pipe Systems is a manufacturer of plastic pipe and fittings for the construction industry. In addition to all recognized industry standards, our pipe and fittings must meet our own high standards. Our pipe and fittings are made to last.

At Royal Pipe Systems, we pride ourselves on our commitment to meet the service requirements of our customers. Our customer service and technical support teams are experienced, knowledgeable and ready to help.

Our head office is located in Woodbridge, Ontario, with extrusion and fabrication facilities in Woodbridge, Ontario; Abbotsford, BC; and Surrey, BC. Our sales offices are located in Woodbridge, Ontario; Surrey, BC; Calgary, Alberta; Winnipeg, Manitoba; and Laval, Quebec.

Through our distributors, Royal Pipe Systems sells plastic pipe and fittings for the municipal, plumbing and electrical markets.

MARKET SEGMENTS

MUNICIPAL

Royal Pipe Systems municipal pipe and fittings product lines are manufactured from high quality virgin PVC resin. For potable water services, we produce Royal Seal™ CIOD (Cast Iron Outside Diameter) pressure pipe and fittings and IPS (Iron Pipe Size) pipe. Our Royal Cobra Lock™ System, a non-metallic joint restraining system is a product for use in trenchless construction.

We have two different product lines for sewer systems; Royal Seal™ gasketed sewer and Kor Flo™ profile pipe and fittings. In addition, we developed a product line of innovative fittings to complement our sewer pipe, including Inspection Chambers, Back Water Valves and Inserta-Tees®.

PLUMBING

Royal Pipe Systems plumbing pipe and fittings product lines are used in residential and industrial applications to convey storm and sanitary waste from the building envelope to the municipal sewer at the property line. This product line can also be used for septic systems. Royal Pipe Systems plumbing products are manufactured from ABS and PVC, including Drain-Waste-Vent (DWV) and solvent weld sewer pipe and fittings.

ELECTRICAL

Royal Pipe Systems electrical pipe and fittings product lines are used in high-rise residential, industrial, institutional and commercial buildings. These products allow for wires to be easily pulled through because the friction is less compared to conventional materials. Our electrical products include rigid PVC conduit, PVC duct pipe and Electrical Non-metallic Tubing (ENT). We have complete lines of fittings for each of our electrical product lines.

MUNICIPAL PRO

ROYAL SEAL™ CIOD PRESSURE PIPE AND FITTINGS

Royal Seal™ CIOD (Cast Iron Outside Diameter) product line is high quality PVC gasketed pipe and fittings for use in potable water applications. Royal Seal™ CIOD pressure pipe is available in Dimension Ratios (DR) 14, 18 and 25, 100 - 450mm (4 - 18”) diameters and 6.1 metre (20’) lengths. Our pipe and fittings are certified to CSA B137.3 and meet the requirements of the AWWA C900, C905, C907 and NSF-61 Standards.

We also have a complete line of fabricated and injection-moulded fittings to complement our pressure pipe. Our fittings are designed to be used with typical engineered joint restraints and concrete thrust blocking.

IPS PRESSURE PIPE

Royal's IPS (Iron Pipe Size) pressure pipe can be used for a variety of applications, including potable water systems, irrigation piping and sewer force mains. IPS pressure pipe is available in Standard Dimension Ratios (SDR) of 21 and 26 (Series 200 and 160, respectively). The pipe comes in 13 - 300mm (½ - 12”) diameters and 3 or 6.1 metre (10 or 20’) lengths. The bell end of the pipe can be either gasketed or solvent weld. It is certified to CSA B137.3 and is NSF-61 listed.

ROYAL COBRA LOCK™ SYSTEM

The Royal Cobra Lock™ System is a non-metallic joint restraining system for trenchless construction for potable water services. The system includes pipe, couplings and nylon splines. The pipe and coupling have precision machined grooves, that align when put together and the spline is inserted creating a full 360° joint. The Royal Cobra Lock™ System is available in 100 - 300mm (4 - 12”) pipe diameters.

ODUCT LINES

ROYAL SEAL™ GASKETED SEWER PIPE AND FITTINGS

Sanitary and storm sewer systems can be built using gasketed sewer pipe and fittings manufactured by Royal Pipe Systems. Our pipe is available in SDR 28 and 35 with 100 - 675mm (4 - 27”) diameters and 4 metre (13’) lengths. Royal Seal™ gasketed sewer pipe and fittings are certified to CSA B182.2 and meets all relevant ASTM Standards. We offer a complete line of injection moulded and fabricated fittings, as well as custom fabrication.

ROYAL KOR FLO™ PIPE AND FITTINGS

Royal Kor Flo™ pipe is a dual wall corrugated profile pipe suitable for sanitary and storm sewer systems. The corrugated exterior wall is heat fused to a smooth inner wall. Royal Kor Flo™ pipe is available in 200 - 600mm (8 - 24”) diameters and 4 metre (13’) lengths. The pipe has minimum pipe stiffness of 320kPa (46psi). It is CSA B182.4 certified and meets the ASTM F794 Standard. Royal Pipe Systems carries a complete line of fittings to be used with our Royal Kor Flo™ profile pipe.

Inspection Chamber with Add-a-Flap™

INNOVATIVE PRODUCTS

Royal Pipe Systems has developed a wide range of industry leading innovative products with regional municipalities to meet their specific needs. We offer these products to all of our customers, so everyone benefits from our ongoing research and development.

As an example, we developed a PVC Inspection Chamber for use in the Municipality of Surrey, British Columbia over 25 years ago. Today, our Inspection Chambers are used throughout Canada and are available with our patented Add-a-Flap™.

Features / Benefits

Royal PVC profile fittings are durable, easy to install and long lasting. There are many benefits of our fittings, including:

- ***Versatile*** - Our PVC profile fittings can be used with all types of PVC profile pipe.
- ***Water tight joints*** - There is virtually no risk of infiltration or leakage.
- ***Corrosion Resistant*** - Our fittings have no metallic parts and do not require costly anodes or protective coatings.
- ***Abrasion Resistant*** - There is no danger of pitting or rapid failure of the PVC material.
- ***Quality Control*** - We have extensive quality control testing in our manufacturing facilities.
- ***Adapters*** - We carry adapters to make connections all other types of sewer pipe for quick and easy connections to laterals, sewer stubs and sewer and storm mains.
- ***Smooth Interior walls*** - The interior walls of our PVC profile fittings allow for higher flow rates.

*Royal Pipe Systems provides an **Installation Guide** with detailed recommendations on pipe handling, assembly and testing of Royal Kor Flo™ pipe and PVC profile fittings.*

Ask your sales representative or distributor for a copy.

For dimensions of any of our fittings, please contact your local Royal Pipe Systems office.

A ROYAL GROUP PRODUCT
Building a Better World

Royal Pipe Systems™

Head Office
131 Regalcrest Court
Woodbridge, ON L4L 8P3
Tel: (905) 856-7550
1-800-263-2353
Fax: (905) 856-4367

Surrey
12511 - 82nd Avenue
Surrey, BC V3W 3E8
Tel: (604) 591-8274
1-800-663-0696
Fax: (604) 591-2051

Calgary
9225 - 40th Street SE
Calgary, AB T2C 4Z5
Tel: (403) 201-8752
Fax: (403) 201-8753

Winnipeg
1201 Sargent Avenue
Winnipeg, MB R3E 3P7
Tel: (204) 783-2924
Fax: (204) 783-2964

Laval
5000 Autoroute 440 West
Laval, QC H7T 2Z8
Tel: (450) 688-6069
1-800-465-9754
Fax: (450) 688-6624

Email: info.rpipe@royplas.com
Website: www.royalpipe.com

Printed 11/2003 - Canada