REFRIDGERATOR COMPRESOR NOISE REDUCTION

Jiaxipera Compressor Co.

Abstract

In this report, we propose and discuss a few compressor noise reduction solutions and their feasibilities with respect to functions, costs and size.

Jason Zhou 260663823

Sicheng Zhu 260659264

Yuying Huang 260674580

Yan Yue 260690009

Table of Contents

I. Executive Summary 5
II. Organization and Information Phases 6
a. Problem Definition 6
b. Background Information 6
- Value Engineering Definition 6
- The Principle of Refrigerator Cooling System 6
- The Principle of Refrigerator Compressor 7
- Existing Possible Noise-Reduction Solutions 7

c. Resources 8
III. Methodology 9
a. Function Analysis 9
b. Functional Diagram (Fast Diagram) 11
c. Flexibility Table 12
IV. Creative phase 14
a. Radiated Noise 14
b. Pressure Pulsation 20
V. Evaluation phase 23
VI. Development phase 24
a. Current Solution 24
b. Scenario 1: 25
c. Scenario 2: Noise Source Part Stiffening 26
- Scenario 2 Proposal 1: Casing Shell 26
- Scenario 2 Proposal 2: Discharge Cavity 29

d. Scenario 3: Sound Absorption Material 31
e. Thermal Analysis 32
f. Cost Financial Analysis 39
VII. Conclusion 41
a. Value Chart & Spider Diagram 43
b. Final Recommendation 45
VIII. Appendices 46
a. Sample Calculation 46
b. Thermal Constants 49
c. Heat Transfer Calculation The heat transfer analysis of scenario 2 and scenario 3 are done in NX. The following calculations show the heat transfer of scenario 1. 49
d. Different Compressor Mechanisms 51
e. Thermal Modeling Mesh Elements 52
f. Final Recommendation Calculation samples 53
IX. Reference 58

List of Figures

Figure 1-Jiaxipera Compressor Model 5
Figure 2-Correlation Between Sound Power Level and Speed 6
Figure 3-Refrigerator Cooling System 7
Figure 4-Structure Details of Hermetic Piston Compressor 7
Figure 5-Environmental Analysis Chart 9
Figure 6-Sequential function analysis of Jiaxipera Compressor 10
Figure 7-Function Diagram of Refrigerator Compressor 11
Figure 8-Current Assembly Cross-Section. 14
Figure 9-Hermitic Piston Enclosure Render (Green). 14
Figure 10-Double Shell Render 15
Figure 11-FLD Schematic 15
Figure 12-Smooth Internal Surfaces of Outer Shell. 16
Figure 13-3D Printed Metal Lattice Structure. 16
Figure 14-Current Outer Shell. 17
Figure 15-Rib Stiffened Outer Shell. 17
Figure 16-Active Noise Cancelling 18
Figure 17-CLD schematic. 18
Figure 18-Damped outer shell assembly cross-section. 19
Figure 19-Ringed Refrigeration Compressor Piston 20
Figure 20-Single Muffler Discharge Tube 21
Figure 21-Twin-Muffler Discharge Tube 21
Figure 22-Current Intake Muffler 21
Figure 23-Aluminum RFPD. 22
Figure 24-Current Assembly Isometric View 24
Figure 25-Double Shell Cross-Section View 25
Figure 26-Discharge Tube Location in Compressor Assembly 29
Figure 27-Effects of Porosity and Cell Diameter on Sound Absorption Coefficient. 30
Figure 28-Damped Outer Shell Cross-Section 31
Figure 29-Heat Transfer Circuit of Single Shell 33
Figure 30-Simplified Single Shell Model 34
Figure 31-Temperature Distribution of Single Shell 34
Figure 32-Temperature Distribution of Single Shell 35
Figure 33-Thermal Circuit of Scenario 1 35
Figure 34-Simplified Model of Radiation Calculation of Scenario 1 36
Figure 35-Simplified Model of Scenario 3 37
Figure 36-Heat Transfer Circuit of Scenario 3 37
Figure 37-Temperature Distribution of Scenario 3 38
Figure 38-Solution Performance Profiles 43
Figure 39-Value Chart 44
Figure 40-Slider-Crank Mechanism 51
Figure 41-Reciprocating Swing Compressors 51
Figure 42-Rotary Vane Compressors 51
Figure 43-Rolling Piston Compressors 51

Figure 44-Scroll Compressors 51
Figure 45-Screw Compressors..... 51
Figure 46-Standard Assembly NASTRAN Mesh Elements Cross-Section 52
Figure 47-Damped Outer Shell Assembly Mesh Elements 53
Figure 48-Paired Comparison Tally Process 53
Figure 49-Linear Cost Estimator (Based on Unit Retail Price)..... 55

List of Tables

Table 1-Resources 8
Table 2-Component Table 10
Table 3-Flexibility Table 13
Table 4-Enclosed Compressor Cavity Description 14
Table 5-Double Shell Description 15
Table 6-Free Layer Damping Description 15
Table 7-GDCS Description 15
Table 8-3D Printing Description 16
Table 9-Shell Natural Frequency Alteration Description 17
Table 10-Dynamic Vibration Absorber Description 17
Table 11-Additional Spring Description 18
Table 12-Active Noise Cancelling Description 18
Table 13-CLD Description 18
Table 14-Sound Absorption Material Description 19
Table 15-Tune Damper Description 19
Table 16-Piston Displacement Description 20
Table 17-Discharge Stiffness Description 20
Table 18-Stroke Efficiency Description 20
Table 19-Muffler Description 21
Table 20-Intake Muffler Description 21
Table 21-Valve Description 22
Table 22-RFPD Description 22
Table 23-Solution Evaluation 24
Table 24-Scenario 1 Summary 26
Table 25-Scenario 2 Proposal 1 Pros and Cons 27
Table 26-Scenario 2 Proposal 1 Summary 28
Table 27-Scenario 2 Proposal 2 Summary 30
Table 28-Sound Absorption Coefficients ("700 Series Fiberglass Data Sheet," 2020) 31
Table 29-Scenario 3 Summary 32
Table 30-Assumptions made for Cost Analysis 39
Table 31-Breakeven Analysis for Three Scenarios 40
Table 32-Payback Period Analysis for Three Scenarios 40
Table 33-Value Table 40
Table 34-Paired Comparison Matrix 42
Table 35-Final Evaluation Matrix 43
Table 36-Thermal Constants used in Calculation 49

I. Executive Summary

Founded in 1988, Jiaxipera Compressor Co. Ltd., located in Jiaxing, China, is the largest environmental-protection, energy-saving, and high-efficiency refrigerator compressor company in the world. The company has a nationally recognized enterprise technology center, two overseas technology marketing centers, three manufacturing bases, and two subsidiaries. It has a production capacity of 31 million compressors per year and more than 3900 employees. The company supplies variable frequency refrigeration compressors to more than 40 overseas customers.

Nowadays, the domestic refrigerator compressor runs at a constant speed. One of the major complaints about domestic refrigerators is the noise from the compressor. Therefore, Jiaxipera compressor partnered with the group, through this project, to research on a few solutions to reduce the sound power level of the compressor by 3 dB when operating at a speed of 4500 rpm. The cost to accomplish this must not increase by more than 3% of the total.

Using value engineering fundamentals, a methodology starting with problem definition was applied to best meet the client's needs. After collecting important information and carefully doing analysis on functions of most elements of the compressors, the group came up with 19 possible solutions aiming to either eliminate radial noise or the strength and frequency of pressure pulsation. Then, through a long time of discussing with the client and stimulating the thermal and vibrational analyses under product modifications conditions, 3 technically-feasible yet relatively-cost-effective solution scenarios were proposed and evaluated with respects to 7 aspects: cost, reliability, dimensional footprint, noise, cooling performance, ease of installation, and profitability and marketability.

through extensive discussion with

simulating

Finally, the group elected to present one optimal solution: double-shell casing with the vacuum in between. 6 dB of noise can be theoretically decreased and the total cost per model increases by approximately 2.4%. In addition, the shape of the shell is not modified while adding another shell outside of the original one, which leads to a relatively easy transformation of manufacturing.

Noise can be theoretically decreased by 6dB at a cost increase of

which is a simple manufacturing adaptation.

Figure 1-Jiaxipera Compressor Model

II. Organization and Information Phases

In the organization and information phases, the purpose is to obtain a thorough understanding of the project, product, and process under study.

dBA is a sound level weighting convention
RMB is Chinese currency. It's about 8 to a $ CDN, no?

a. Problem Definition

The focal point of this project is to reduce the noise power level by 3 dB when operating at 4500 RPM. Given Figure 2, the sound power at 4500 rpm is around 41 dBA, which is required to be 38 dBA after improvement. In terms of the cost, currently, the cost per unit compressor is 110 RMB where 70% of the total cost is the material cost. As desired, the cost should not have a significant increase where the maximum cost could only be 110 RMB . Meanwhile, the compressor size cannot have the radius increase more than 1 cm so that it can still fit in matching refrigerator models.

xxxx
a

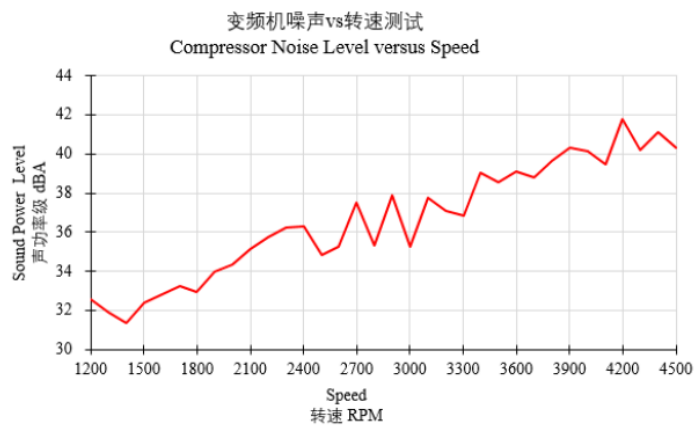

Figure 2-Correlation Between Sound Power Level and Speed

b. Background Information

- Value Engineering Definition

In this project, value engineering fundamentals should be used to best meet the client's needs. Value engineering applies to the new products, projects, and processes the value methodology process, which is a systematic process to improve the value of a product, project or process through the analysis of functions and resources. Value can be defined as follows:

$$Value = \frac{Satisfaction\ of\ Needs}{Cost\ of\ Resources}$$

For this project, the value is increased by reducing the sound power level to greatly increase the satisfaction of needs and slightly increasing the cost of resources by less than 3% of the total.

Good

- The Principle of Refrigerator Cooling System

Generally, a refrigerator cooling system includes a compressor, condenser, throttling device, and evaporator. By going through these devices, the refrigerant continuously brings the heat from the refrigerator interior to the environment.

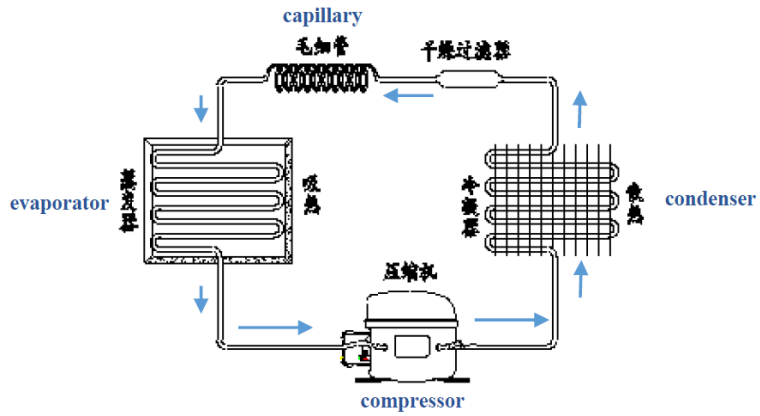

Figure 3-Refrigerator Cooling System

- The Principle of Refrigerator Compressor

The compressor is powered by a motor (100 W) which rotates the crankshaft so that the connecting rod pushes the piston to move back and forth in the cylinder, to promote the flow of refrigerant in the cooling system. At the bottom of the compressor, when compressor running, the oil is absorbed into the oil suction hole and moves upwards to lubricate and cool the crankshaft. The detailed structure of the hermetic piston compressor is shown in Figure 4.

to compress & promote the flow

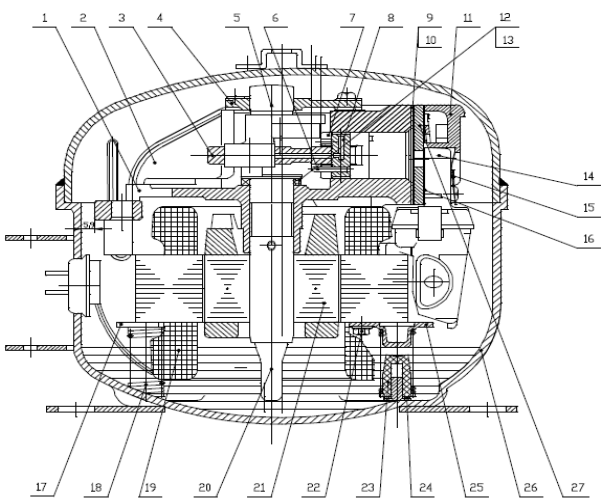

1 crankcase
2 inner discharge tube
3 connecting rod
4 bearing support
5 crankshaft
6 elastic pin
7 piston
8 piston pin
9 valve plate gasket
10 suction valve leaf
11 cylinder cover
12 gasket
13 bearing support
14 suction muffler
15 muffler clip
16 gasket
17 motor support
18 supporting spring
19 stator
20 oil pipe
21 rotor
22 rotor screw
23 support
24 gasket
25 support
26 shell
27 valve plate

Figure 4-Structure Details of Hermetic Piston Compressor

There are 4 main processes of the compressor: suction, compression, exhaust, and expansion. It is noticeable that the suction and expansion valve are passively opened and closed by the pressure differences.

- Existing Possible Noise-Reduction Solutions

For many years, reducing the compressor noise has been a priority at Jiaxipera Compressor Co. Based on years of experience, compressor shell radiation noise is an important part of refrigerator noise. For variable-speed compressors, with increasing rotation speed, the radiation noise is larger. Two main research directions of reducing compressor shell radiated noise: 1) to improve the sound insulation

noise is greater

characteristics, for example, increase shell thickness. 2) to reduce the internal noise source by analyzing the causes of noise, classifying noise sources, and exploring measures. Different compressor mechanisms displayed in Appendix D. are some common widely-used compressor designs (Soedel, 2007). Jiaxipera Compressor Co. also redesigned the suction structure to reduce noise (Shoufei WU*, 2016).

c. Resources

Stakeholder Name	Role	Coordinates
Shoufei Wu	Client	Wushoufei@jiaxipera.com
Yuying Huang	Member	Yuying.huang@mail.mcgill.ca
Yan Yue	Member	Yan.yue@mail.mcgill.ca
Sicheng Zhu	Member	Sicheng.zhu@mail.mcgill.ca
Shourav Ahmed	Member	Shourav.ahmed@mail.mcgill.ca
Jason Zhou	Member	Jason.zhou@mail.mcgill.ca
Lucie Parrot	Advisor	Lucie@martin-parrot.com
Paul Zsombor-Murray	Advisor	Paul@cim.mcgill.ca
Vince Thomson	Advisor	Vince.thomson@mcgill.ca

Table 1-Resources

III. Methodology

a. Function Analysis

- Environmental analysis

The environmental analysis of the compressor aims to identify functions based on the elements which interact with the product from the beginning of its lifecycle until the end. In this case, the product, compressor, will not require maintenance[1]. Therefore, maintenance/worker will not be considered as an interacting element. Also, the possible relationships between elements are indicated as well. Note the environmental analysis does not constitute an exclusive list of functions. Other technics are utilized to obtain a complete picture of the products' functions as well. techniques

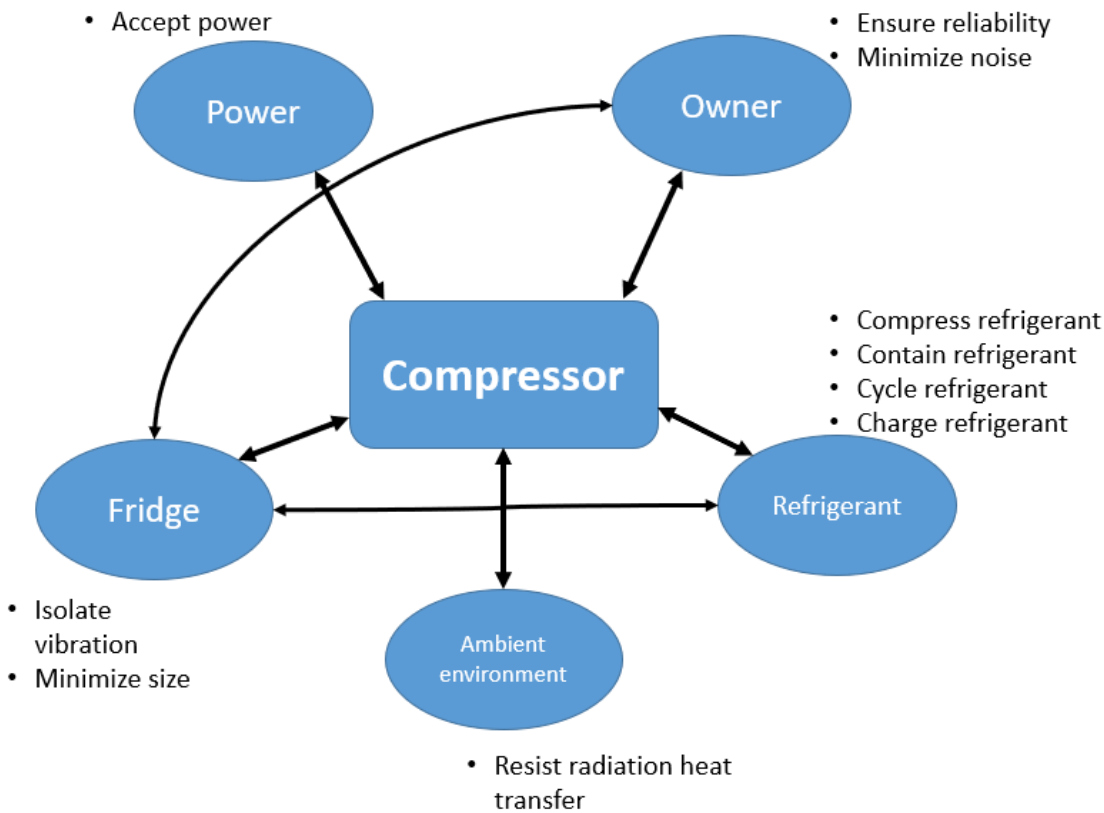

Figure 5-Environmental Analysis Chart

[1] Client provided information: 20-year lifespan. No maintenance required.

- Sequential Function Analysis

Sequential function analysis aims to define different functions along a process. For Jiaxipera's compressor, different functions can be analyzed through the process of refrigerant being sucked in, compressed, exhausted, and expanded inside the compressor.

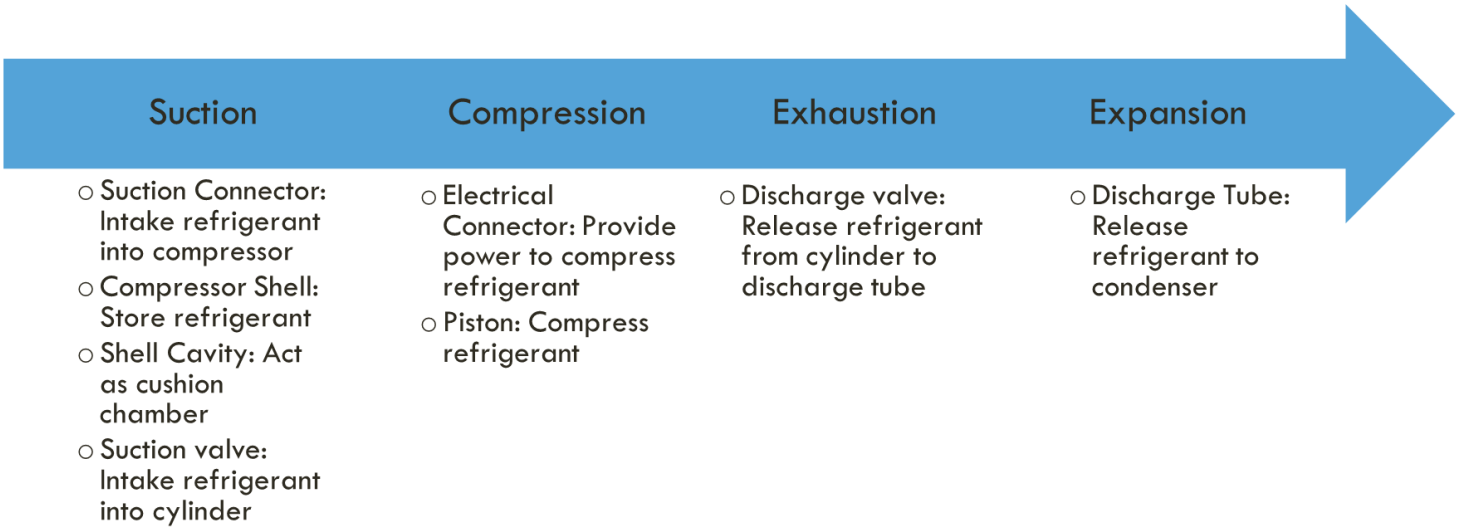

Figure 6-Sequential function analysis of Jiaxipera Compressor

- Reference Product Analysis

Component	Function
Crankcase	The connecting rod, rod bearing, and the crankshaft are fit inside crankcase
Suction Valve	Control the fluid flow into the compressor by opening and closing. The gas is drawn in from the intake pipe on the cylinder seat until the piston moves to the bottom dead point
Exhaust Valve	When the compressed gas pressure is slightly higher than the pressure of the exhaust chamber and the spring force of the exhaust valve, the exhaust valve will release burned gases from a cylinder through the exhaust pipe
Inner Discharge Tube	To conduct gas from the manifold to shell; must resist the maximum internal pressures and temperatures that refrigerant fluid works
Crankshaft	A rotating shaft which converts the reciprocating motion of the pistons into rotational motion
Piston	A piston is driven by a crankshaft to deliver gases at high pressure
Connection Rod	To connect shaft and piston
Suction Muffler	To reduce the noise produced by pressure pulsations
Stator	A stator provides a rotating magnetic field that drives the rotating armature in an electric motor
Electric Motor	A machine that converts electric energy into mechanical energy to drive and rotate the crankshaft
Upper and Lower Shell	A sheet structure that is curved to cover the compressor core

Table 2-Component Table

b. Functional Diagram (Fast Diagram)

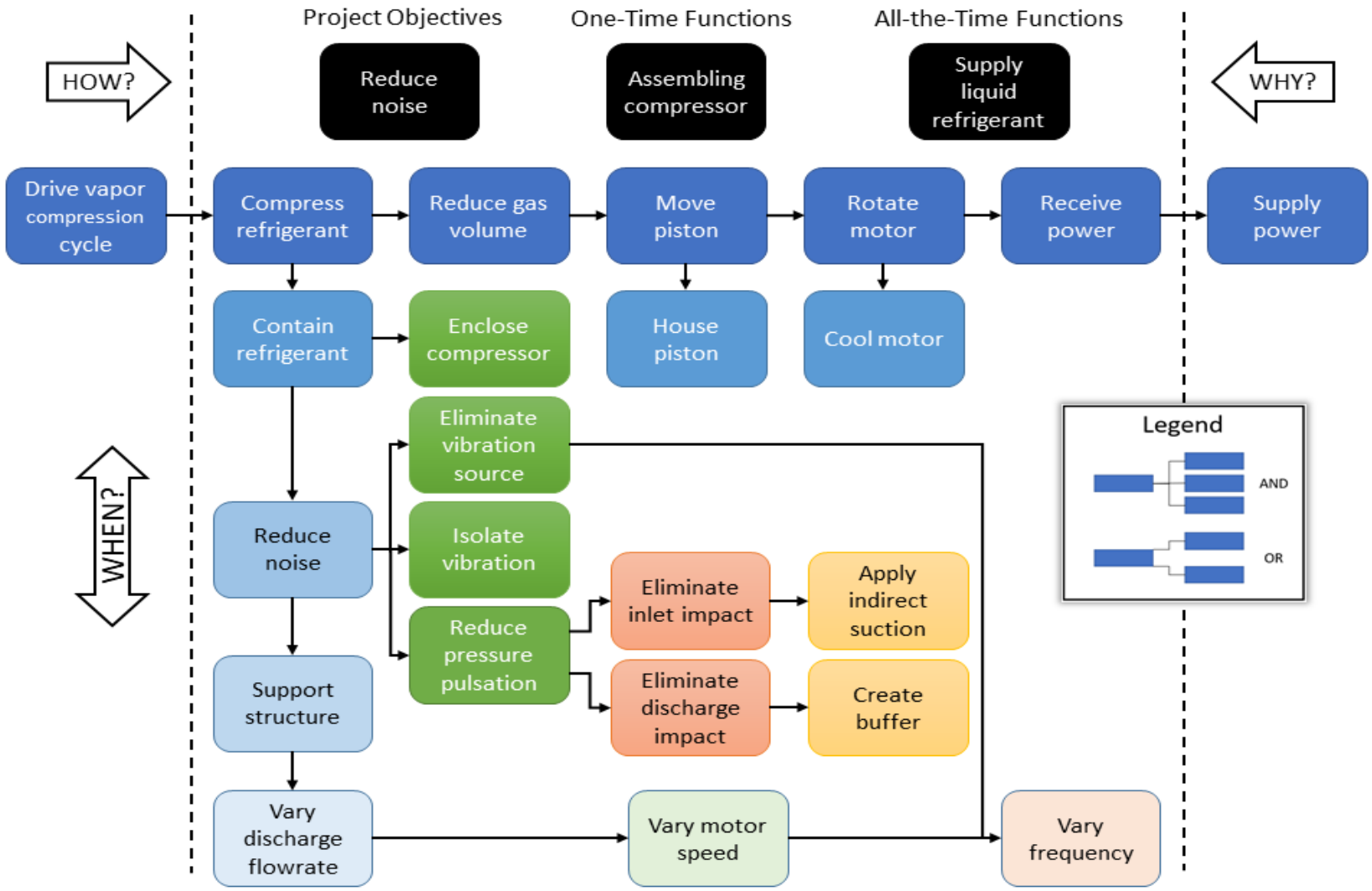

Figure 7-Function Diagram of Refrigerator Compressor

c. Flexibility Table

In order to investigate the function further, the feasibility of each function will be discussed in this section. In this report, the Flexibility Classes method is used to evaluate the feasibility. The flexibility is divided into 4 levels.

- F0 no flexibility
- F1 little flexibility
- F2 some flexibility
- F3 very flexibility

Each function also consists of the criteria and level. The criteria define the measurement of a function. The level indicates the specific result of criteria such as m, dB, and Kg.

Functions	Criteria	Level	Flexibility	Notes
Compress Refrigerant	Compression Ratio	12.2	**F0**	This is fixed with the compressor model
Reduce gas volume	Compression Ratio	12.2	**F0**	This is fixed with the compressor model
Move piston	Stroke Length	5mm	**F0**	Bore diameter and stroke length are fixed with the compressor model
Rotate motor	RPM	1200-4500	**F0**	mm
Accept Power	Power Consumption	100w	**F0**	This is fixed with the compressor model
Contain refrigerant	Casing Volume	N/A	**F2**	The design of the casing can vary as long as the volume does not increase significantly
Reduce Noise	dB	-3dB	**F3**	Reduce the noise as much as possible
Support structure	Shape	Computer-Aided Design	**F3**	The design can vary a lot
Vary discharge flowrate	m^3/s	N/A	**F1**	This depends on the operating frequency
Enclose compressor	Cylinder Volume	N/A	**F0**	Cylinder Shape is fixed with the compressor model
Isolate vibration	Shell Thickness	3mm	**F1**	Thickness can vary but it will increase the cost

Reduce pressure pulsation	Shape	Computer-Aided Design	**F3**	This depends on the discharge tube design
House piston	Bore Diameter (mm)	3mm	**F0**	This is fixed with the compressor model
Eliminate inlet impact	shape	Computer-Aided Design	**F3**	This can vary a lot in the design
Eliminate discharge impact	shape	Computer-Aided Design	**F2**	Must identify associated peak and target in consequence.
direct suction/indirect suction	Discharge Tube Configuration	Computer-Aided Design	**F1**	This could be changed but is not recommended
Create muffler	Number of Buffer Zones	1 to 2	**F2**	More mufflers reduce the noise further
Vary frequency	RPM	1200-4500	**F1**	Depends on the refrigerator control system

Do you mean a +/- tolerance on piston nominal diameter?

Table 3-Flexibility Table

The Flexibility table in Table 3 indicates the functions relates to the piston & cylinder has no flexibility. The model of the compressor is defined by the compression ratio and stroke length. Thus, the stroke length and compression ratio are fixed with the model. If the compression ratio is changed, the compressor will be considered as another type of model. The shape of the discharge tube has large flexibility. This is due to the low cost of the tube. Any functions related to the operating frequencies are hard to define because the operating frequency has a large range and depends on the control system of the refrigerator.

IV. Creative phase

Following the completion of the information phase, the project now progresses onto the creative phase. This current section aims to generate a great number of potential solutions. Recognizing the non-triviality of the creative process, no judgment concerning the feasibility of the proposed solution will be given at this stage.

The following section is grouped into two lists. The first one containing a concept targeting radiated noise while the latter contains all attempts in solving pressure pulsation.

a. Radiated Noise

In most industrial applications, the dampening of radiated noise usually follows one of three approaches: Mass control, stiffness control, and damping controls. This trend mostly holds when it comes to our investigation as well.

Below is a template of the format used to present each idea:

(Solution title)	
(Solution description)	(Figure)
	(Figure)

1. Vacuum internal compressor cavity with hermitically enclosed fluid path.	
Currently, piston housing isn't hermitically enclosed. The proposed idea is to hermitically enclose the whole fluid path, thus making it possible to pull a full vacuum in the internal cavity of the compressor. To implement this solution, the intake geometry will have to change from a semi-direct to a direct layout. Furthermore, a novel lubrication system is required to ensure oil supply to the enclosed piston housing.	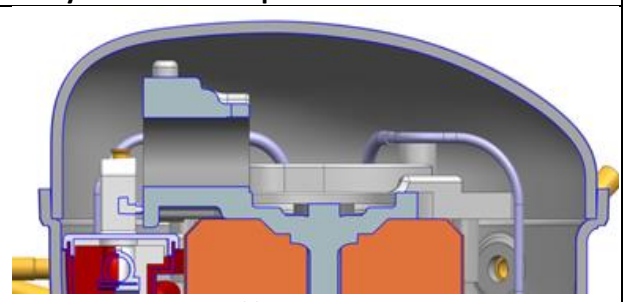 *Figure 8-Current Assembly Cross-Section.*
	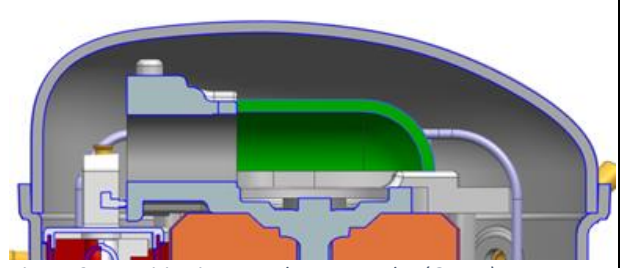 *Figure 9-Hermitic Piston Enclosure Render (Green).*

Table 4-Enclosed Compressor Cavity Description

2. Introducing a second hermitic casing outside of the existing one. Vacuum cavity between	
whereas the current compressor has a 3mm thick steel shell. The proposed idea will feature an extra layer of hermitic casing which allows for a vacuum layer to be implemented. This solution is highly similar than the previous solution, to	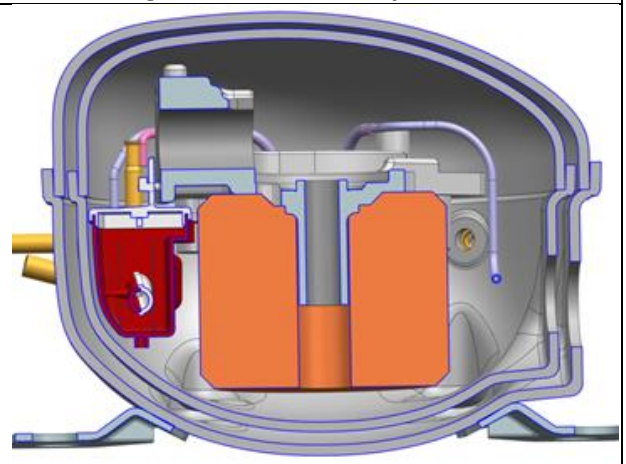 *Figure 10-Double Shell Render*

Table 5-Double Shell Description

3. Free layer damping treatment on the shell.	
One of the simplest and most direct way of reducing radiated noise. It consists of bonding a layer of damping material on one or both sides of the casing. The choice of the viscoelastic material will greatly impact the frequency targeted. Many commercial solutions can be found such as "Coat of Silence TM"	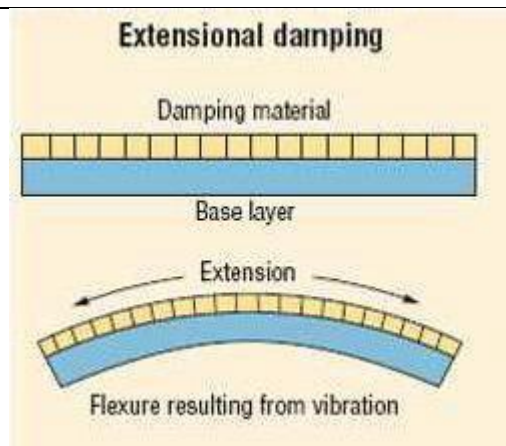 *Figure 11-FLD Schematic*

Table 6-Free Layer Damping Description

4. Incoming sound wave absorption topology by gas dynamics cold spray.
The smooth internal surfaces of the casing can be coated with metal powder through the process of gas dynamic cold spray. The goal is to create a highly irregular surface that would dissipate some of the energy from the sound waves traveling to the shell.

Table 7-GDCS Description

5. Incoming sound wave absorption topology by 3-D printing the coating	
Similar strategy than the previous solution. However, using 3D-printing as the manufacturing method. Still, the idea is to utilize a lattice-type structure to dissipate energy thus leaving less transmission to the shell. Of course, this solution does not affect any direct transmission paths such as couplings to the outer casing.	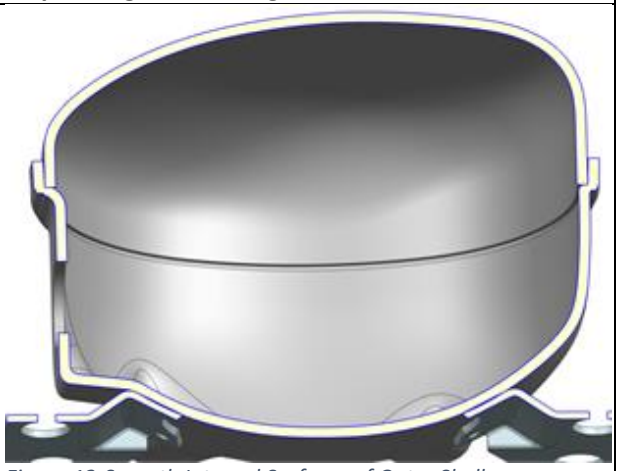 *Figure 12-Smooth Internal Surfaces of Outer Shell.*
	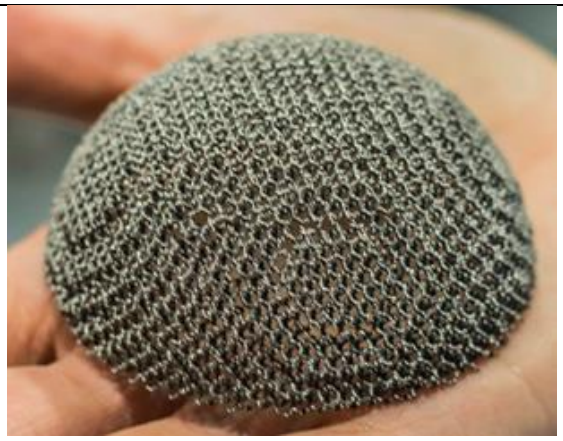 *Figure 13-3D Printed Metal Lattice Structure.*

Table 8-3D Printing Description

6. Shell natural frequency alteration	
Rib stiffen the cap. This will likely have an immediate response to the most significant harmonics, however, it may negatively affect the response of a higher frequency range.	 *Figure 14-Current Outer Shell.*
	 *Figure 15-Rib Stiffened Outer Shell.*

Table 9-Shell Natural Frequency Alteration Description

7. Dynamic vibration absorber on the crankcase
Attaching a viscoelastic vibration absorber to the crankcase to attenuate the vibration response of the main structure.

Table 10-Dynamic Vibration Absorber Description

8. Additional spring support to the main structure
currently, the main structure is coupled to the casing through 4 compression springs in the vertical axis. With the piston traveling in the horizontal direction, we propose to add springs aligned with the plane of travel of the piston to directly counter its vibrations.

Table 11-Additional Spring Description

9. Active noise canceling	
An active noise-canceling device within the casing. (Accelerometer to control unit, back to motor with new frequency of operation.) similar to technology found in noise-canceling headphones.	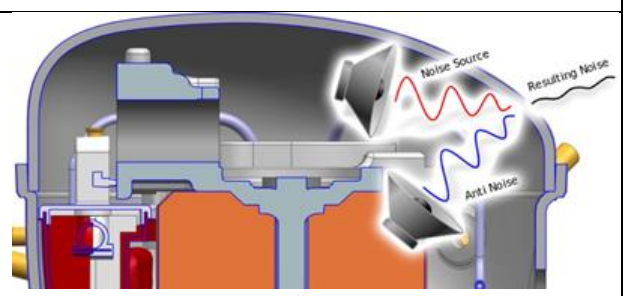 *Figure 16-Active Noise Cancelling*

Table 12-Active Noise Cancelling Description

10. Constrained Layer Damping (CLD) for the outside shell	
Application of off the shelf CLD material on critical locations on the outside of the shell. Usually, in terms of the casing, critical locations are areas of large curvatures. For example, the top surface of the casing.	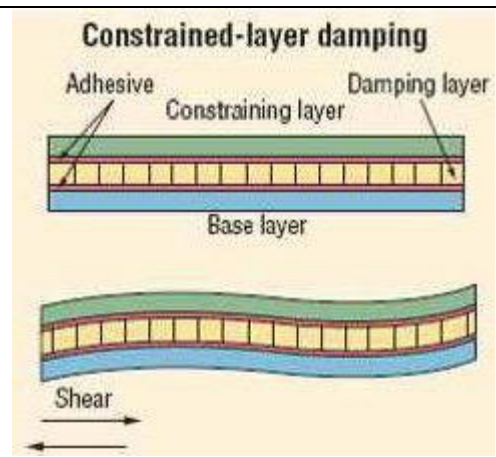 *Figure 17-CLD schematic.*

Table 13-CLD Description

11. Sound absorption material shell on the outside	
A casing made from a sound absorption material surrounding the compressor. Therefore, not changes need to be brought to the existing compressor geometry. One potential material could be 70 series fiberglass. `... no changes to existing compressor geometry need to be made.`	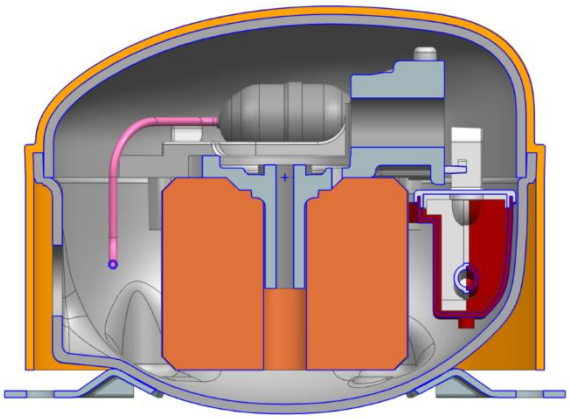 *Figure 18-Damped outer shell assembly cross-section.*

Table 14-Sound Absorption Material Description

12. Tune vibration absorber on the casing
Tune vibration absorber on the casing to eliminate resonance frequency, if possible, utilize multiple dampers to target higher harmonic frequencies.

Table 15-Tune Damper Description

b. Pressure Pulsation

The second major noise source tackled is the strength and frequency of pressure pulsation. All points brought up in this sub-section are directly related to the fluid path of the refrigerant rather than the presence and impact of the compressor to the ambient elements. It targets the internal structures.
on

1. Piston displacement increase
Increasing the piston geometry leading to large displacement. This can allow the compressor to achieve the desired flow rate at lower rpm. Since operational noise level only reaches an excessive level when operating in a speed range above 3000rpm, we believe that a slower running compressor could indirectly remedy the situation.

Table 16-Piston Displacement Description

2. Discharge tube stiffness control
Current research on the discharge tube is focused on the idea of making the material softer. A softer tube has the advantage of lowering the vibration transmission. However, a stiffer tube may lead to less tube vibration.

Table 17-Discharge Stiffness Description

3. Increase stroke efficiency	
The solution consists of adding piston rings to enhance the working efficiency of the compression motion. This practice is commonly used in larger internal combustion engines and could help reduce the top operational speed of the compressor thus lowering the global noise level.	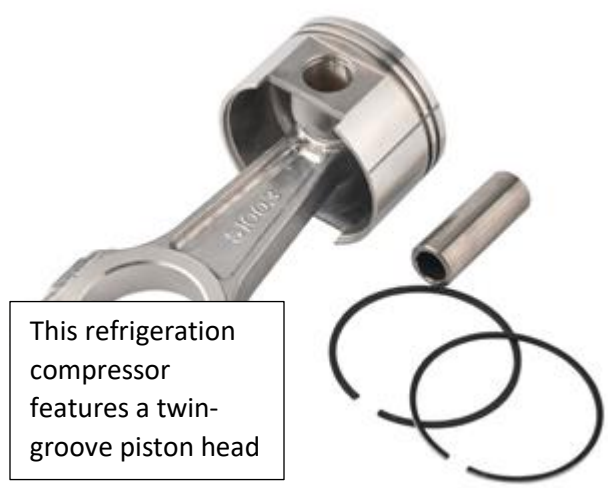 *Figure 19-Ringed Refrigeration Compressor Piston.*

Table 18-Stroke Efficiency Description

4. Additional discharge muffler	
The addition of a stand-alone muffler cavity or altering the production model's single cavity design from a dual cavity muffler can greatly reduce pressure pulsation.	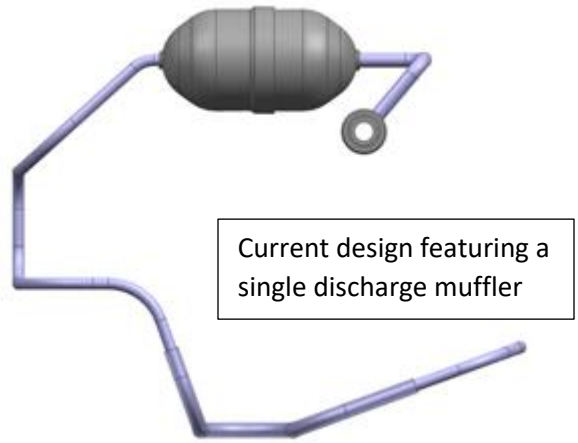 *Figure 20-Single Muffler Discharge Tube*
	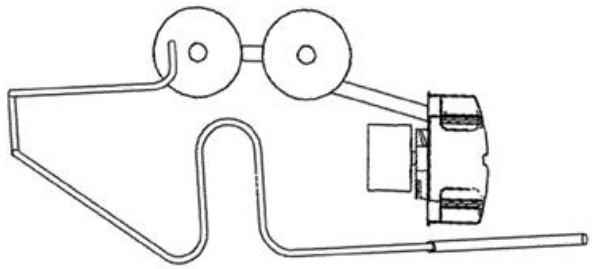 *Figure 21-Twin-Muffler Discharge Tube*

Table 19-Muffler Description

5. Intake muffler redesign	
Optimizing the intake muffler to reduce intake pulsation caused by the valve system. (see current intake muffler on the right)	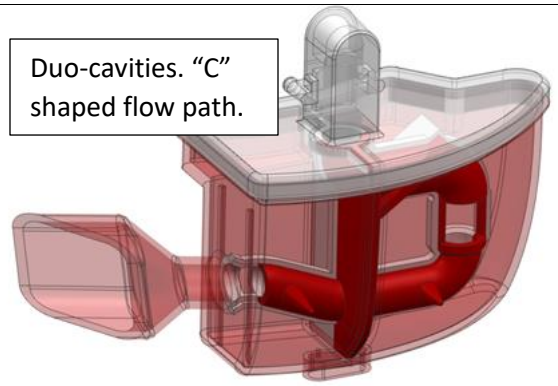 *Figure 22-Current Intake Muffler*

Table 20-Intake Muffler Description

6. **Valve modification**
Currently employing passive diaphragm valves. Altering the valve geometries to active valves timed with a crankshaft could alleviate pressure pulsation.

Table 21-Valve Description

7. Rigid-frame porous damping in a discharge muffler	
Addition of a rigid porous damper material within the confine of the discharge muffler.	 *Figure 23-Aluminum RFPD.*

Table 22-RFPD Description

V. Evaluation phase

Following the brainstorming phase is the evaluation procedure. Our team adopted a straightforward qualitative process to assess the feasibility of each proposed solution. Along with the guidance of our client liaison, each solution is discussed and judged based on their perceived difficulties of implementation. At the end reaching a YES/NO verdict moving forward.

Note that ideas receiving a YES mention do not have to be stand-alone solutions. Combinations can occur. Client comments are included when applicable. The detailed solution evaluation is presented in Table 23.

Solution		Client's Comment	Verdict (Yes/No)
Radiated Noise	Vacuum internal compressor cavity with hermitically enclosed fluid path.	A decent idea as the vacuum does not transmit sound. However, a lot of detail problems need to be considered, such as how to seal the piston, and motor operating temperature	Yes
	Introducing a second hermitic casing outside of the existing one. Vacuum cavity between both shells.	Vacuum solutions have high damping potential	Yes
	Free layer damping treatment on the shell.	Previous research was not documented.	Yes
	Incoming sound wave absorption topology by gas dynamics cold spray.	The cost might be too high	No
	Incoming sound wave absorption topology by 3-D printing the coating	Cost and production speed would be issues	No
	Shell natural frequency alteration		Yes
	Dynamic vibration absorber on the crankcase	Is feedback control needed? How to achieve a good amount of vibration absorption without increasing too much cost needs to be considered. A counterweight is used to reduce some vibrations. Usually, it's a small Steel part placed on the crankshaft.	No
	Additional spring support to the main structure	Adding more springs could potentially optimize the vibration transmission from inside to outside.	Yes
	Active noise canceling	Too much R&D required	No
	Constrained Layer Damping (CLD) for the outside shell		Yes
	Sound absorption material shell on the outside		Yes
	Tuned mass damper on the casing		No

Pressure Pulsation	Piston displacement increase	Not a large margin to increase the piston efficiency. Changing piston displacement leads to	No
	Discharge tube stiffness control	Afraid this will cause increased casing vibration, since better vibration transmission with the outer structure. Research has been done on the alternative of softening the tube, however, little attention has been paid to stiffen the tube.	No
	Increase stroke efficiency	For small size piston actuators, it is difficult to implement such a part, due to the intricate size. Do not devote further investigation into this topic	No
	Additional discharge muffler		
	Intake muffler redesign	Extensive CFD needed. A highly optimized solution as it stands.	No
	Valve modification		No
	Rigid-frame porous damping in a discharge muffler		Yes

Table 23-Solution Evaluation

VI. Development phase

a. Current Solution

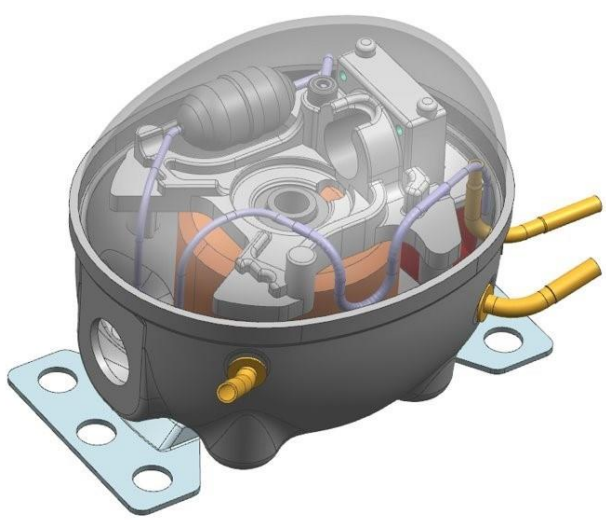

Figure 24-Current Assembly Isometric View

Figure 24 indicated the current design of the compressor. The compressor is composited with a synchronous motor and a single piston. The structure is supported by the crankcase. In operation, the refrigerant is sucked by the suction muffler and is compressed by the piston. After compression, the high-pressure gas goes through the discharge tube and enters a buffer zone to decelerate and finally goes out

of the compressor. In this design, the company applied springs to connect the crankcase and the shell to reduce vibration. This design is also a semi-direct suction design that reduces the noise of the compressor (Shoufei WU*, 2016).

b. Scenario 1:

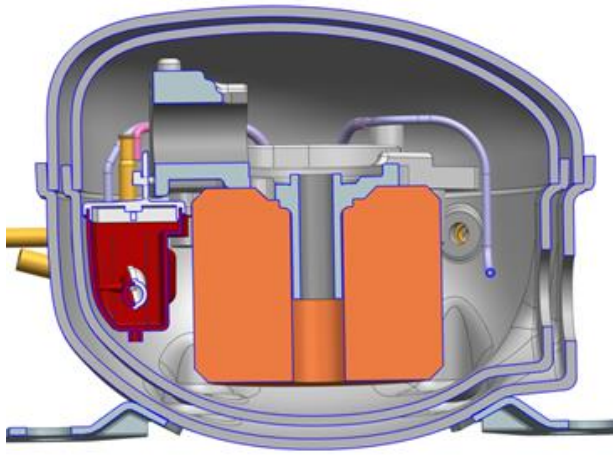

Figure 25-Double Shell Cross-Section View

For the current solution, it has a single shell design. Thus, there are almost no barrels in the compressor to prevent sound from transmitting. In the single shell compressor, a lot of components are designed to dampen the vibration instead of isolating sound transmission. For example, the spring at the bottom is designed to damp the vibration of the crankcase. The shape of the discharge is also designed to minimize its vibration at a frequency over 2000Hz (Shoufei WU*, 2016).

Acoustic Concern

There is a great portion of sound generated inside the compressor. In order to prevent the transmission of sound, a double shell design could be implemented. Since sound needs material to transmit through, the vacuum is a good idea to isolate the noise. Theoretically speaking, the sound can reduce 5 dB if 90% percent of the vacuum is reached (Walters & Dance, 2014).

Manufacturing & Cost

As shown in Figure 25, this design is very similar to the original design. The only difference is that the extra shell is added to the compressor and the space between two shells is the vacuum. According to the company representative, the shells can be manufactured by using a punching die mechanism. The outer shell has holes for discharge tubes to pass through and it is welded to the base support. The vacuum can obtain by a vacuum pump. To manufacture a new mold of the outer shell, there will be a fixed investment of 150,000 RMB, and the material cost of the shell is about 3.5 RMB/Kg. The detailed finical analysis will be discussed in the later section of the report.

Advantages of change	Disadvantages of change
• High Sound Absorption Coefficient. • Small modification on the design. • Relatively low fixed cost. • Easy to design and manufacture. • Long durability.	• Increase Motor Temperature. • Increase Material & Manufacturing Cost. • Increase the volume of the compressor.
Comments	**Risks**
From the analysis, this proposal should reduce more than 3dB of the noise. Although there is a fixed cost of 15,000 RMB at the beginning, the cost per model is negligible (the company sells 5000000 models annually). Another advantage of this design is that the inner configuration of the compressor is not changed. Thus, a minimum amount of modification could be applied. Assumptions 1. The sound transmits through a tube and supporting structure is negligible. 2. The ratio of material cost to manufacturing cost is 7:3.	Since the vacuum space also prevents heat transfer, there is a risk of an overheat of the stator of the motor. The heat transfer analysis will be conducted in the further section of the report. • This design increased the cost of the compressor. However, according to the company representative, the selling price of 1 model can increase 3RMB if 3dB noise is reduced. Thus, the cost can be compensated by the increased selling price.

Table 24-Scenario 1 Summary

c. Scenario 2: Noise Source Part Stiffening

Two of the main noise sources of a compressor come from the radiated noise and pressure pulsation. Therefore, targeting the main sources at the heart of those noises should provide significant noise level reduction. In particular, two components will be subject to alterations: the exterior casing and the discharge muffler.

- Scenario 2 Proposal 1: Casing Shell

Current Solution:

Frist, radiated noise is mainly transmitted through the casing. Hence the vibration characteristics of the said part are utterly crucial in the investigation for radiated noise. The current assembly comprises a two-piece casing separated into a top and bottom part. Both pieces are made from 3mm thick carbon steel plates and take on their final shape through a punching process. See Figure 24 for an illustration of the current casing within the compressor assembly.

Proposed Solution:

The proposed solution is to enhance stiffness thus increasing the natural frequency of the casing. In consequence, reducing the harmonic response of the casing under the operational frequency of the assembly. This approach is chosen in light of the conclusion provided in a Jiaxipera in-house study *(Shoufei WU*, 2016)*.

Previously, Jiaxipera has investigated the effect of utilizing thicker gauge material to produce the parts in question with favorable results. However, the main obstacle resides in the added cost. Since the casing material itself constitutes approximately 20% of the total unit cost, any fluctuation in its material cost can translate into a great reduction in sales volume. Therefore, respecting the current part, thickness shall constitute the basis of our alterations.

With all that in mind, the team is proposing to add stiffening features onto the surfaces of the casing to directly counter the lower frequency harmonic responses of the part. The term "low frequency harmonic" is interpreted as any frequency within the operating limit of the assembly. A comparative illustration of the original and altered top casing shell can be seen in Figure 15 of the creative phase.

Now implementing such a solution alone would probably lead to a detrimental effect in terms of higher-frequency harmonics. For example, letting the operational rpm to be around 3600, thus 60 Hz, a stiffer casing would vibrate less for the 60Hz excitation but would be more in-tune with the 120Hz frequency. Now, added to the fact that the human ear is more perceptible to higher pitch noises, such change would render the compressor seem louder.

Therefore, a constrained-layer damping material shall be implemented alongside a stiffer shell. A stiffer shell's enhanced response to damping is what this solution is after. Numerous, studies on CLD or free layer fibrous damping demonstrated that damping solution is most effective when targeting sources for frequencies into the high hundreds and even a few thousand Hz (Torvik, 2007).

In summary, the proposal consists of a stiffening of the basic shell structure to avoid first-order harmonics than compensation of higher harmonic response using damping layers. Depending on the thickness of the damping layer, an overall reduction of 1-4dB is achievable.

Discussion

Jiaxipera, being one of the biggest refrigeration compressor manufacturers in China, it has three manufacturing facilities capable of accomplishing all the manufacturing demand of its products. And as told by the client, a slight change in geometry of the casing component is well within their capabilities. Information given from our client confirmed that the fixed cost associated with such geometry alteration would have a very marginal effect on the product itself.

Since the design in question does not affect the manufacturing process, nor does it change the material. The only real cost comes from the need to produce a novel set of punch and die. As per our client's estimate, the fixed cost of such is evaluated at RMB 150,000 or CAD 30,000.

Advantages	Disadvantages
• Neglectable to null added material cost. • Minimal changes for the form factor, therefore allowing retrofitting. • Minimal changes to the manufacturing process.	• Marginal reduction to noise higher frequency noise level.

Table 25-Scenario 2 Proposal 1 Pros and Cons

Comments	Risks

The identification of modal response and stiffening of anti-modal locations is one of the most well-accepted approaches to limit radiated noise. Simple design changes could yield very significant results. The complete frequency response of the assembly needs to take place along with experimental validation. Assumptions 1. No change to the labor required. 2. No added steps into the manufacturing process. 3. A new set of punch and die required totaling in the fixed cost of CAD$ 30 000.	The usual risk in increasing the stiffness of a part is the enhancement of sound transmission. Therefore, the identification of strong harmonics is crucial.

Table 26-Scenario 2 Proposal 1 Summary

- Scenario 2 Proposal 2: Discharge Cavity

Current Solution

As it stands, the discharge tube is following a lengthy and tortuous path from the exit of the cylinder block to a weld connection on the compressor casing. Along the way, it passes through a single muffler cavity. The discharge tube is made from a 3.6mm OD, 0.5mm wall thickness copper tube. Figure 26 illustrates the discharge tube within its assembly.

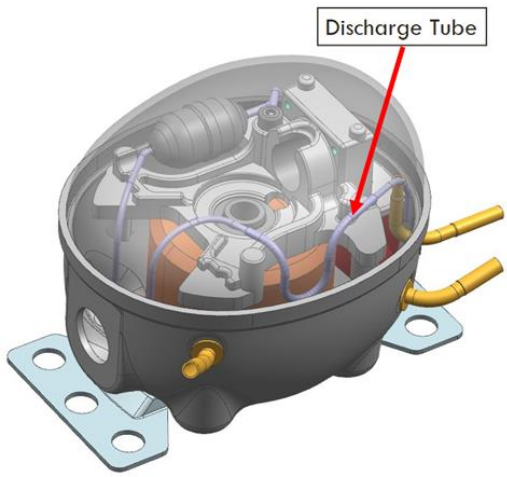

Figure 26-Discharge Tube Location in Compressor Assembly

Proposed Solution

To attenuate the effect of pressure pulsation, one solution is to increase the damping factor by adding a layer of rigid frame porous material inside the discharge muffler. Standard porous material such as aluminum foam, rock wool, or melamine has shown promising results. When tested with R134a, all these materials are capable of reducing the global noise level of a compressor by around 2 dB (Mareze, Lenzi, & Pellegrini, 2012).

Discussion

The addition of a sealed part will always bring up a potential reliability concern. In order to avoid the disintegration of the porous damper over the lifetime of the product, it is preferable to opt for a material such as aluminum foam rather than melamine which is more prone to fall apart during a typical ten-year service life.

Another advantage of porous aluminum is that manufactures are usually capable of tuning the pore sizes to suit different sound absorption applications. For example, ALUPOR, a German company specializing in porous aluminum foams, offers tailored material for specific soundproofing conditions.

See Figure 27 illustrates the average sound absorption coefficients for different cell sizes and porosity. The input frequencies range from 0 to 1000 Hz (WANG, WANG, WU, YOU, & Development, 2007).

Structure	Samples							
	1	2	3	4	5	6	7	8
Porosity, %	60.6	77	72.6	65.6	64.6	68.2	75.8	54.2
Diameter, mm	1.0	0.05	0.4	1.6	1.0	0.05	1.6	3.2
Average absorption coefficient	0.448	0.538	0.444	0.438	0.45	0.446	0.474	0.458

Figure 27-Effects of Porosity and Cell Diameter on Sound Absorption Coefficient.

Now, open-pore aluminum foam can be quite costly if imported. Therefore, it would be important to establish a supply chain without crossing borders. Luckily, companies specializing in the cast aluminum foam can also be found in China with very competitive pricing. One such company is Rontec located in Liaoning. Their oversea fare is listed at US$96 per m^2 (or ￥474). Considering the size of a compressor's discharge muffler, a 1-m^2 aluminum foam plate should be capable of providing damping for approximately 400 units. Which is equivalent to an added material cost of ￥1.19 per unit. In other words, 40% of the targeted ￥3 total price increase.

Advantages	Disadvantages
• Neglectable to null added material cost. • No changes to existing production parts. • Able to achieve a reasonable level of damping for a range of cell sizes.	• Cost versus noise reduction ratio relatively modest. Not able to achieve 3dB improvement as a stand-alone solution. • Open-pore aluminum is more expensive than closed-pore version. • Added weight to discharge tube.
Comments	**Risks**
A slight modification in the muffler dimension and geometry could help to reduce any rattling effect introduced by tolerancing issues. e.g. change the muffler to a more regular straight cylinder shape. Assumptions 1. Cylindrical damper thickness of 10mm fitted inside discharge muffler. 2. Added manufacturing costs for laser cutting damper are negligible.	The ideal fitting of the damper is required. An undersized damper could introduce rattling within the muffler. If the current muffler size maintained, the possible thickness of the damper might be limited, thus leading to marginal noise benefit.

Table 27-Scenario 2 Proposal 2 Summary

d. Scenario 3: Sound Absorption Material

For the current design as discussed before, there is no insulation outside the compressor and the design does not contain any sound absorption material.

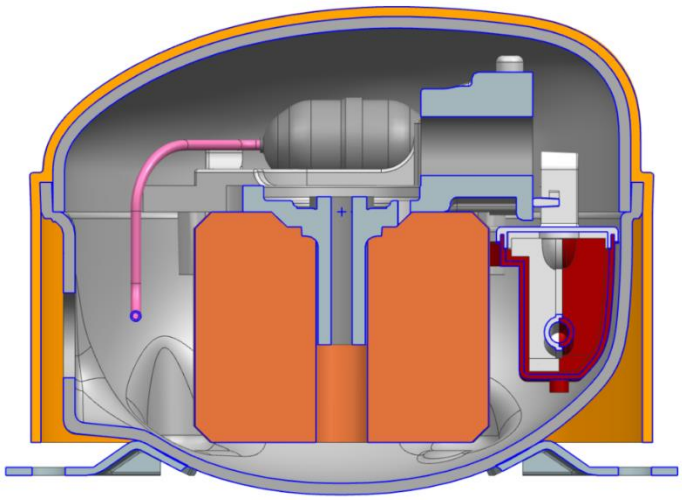

Figure 28-Damped Outer Shell Cross-Section

In many buildings and housings, the sound absorption material is used for sound insulation. Sound absorption materials usually have many holes inside. This allows sound to bounce inside the holes and 'get trapped' by the structure. From conservation of energy, sound absorption material converts the acoustic energy to heat. The sound absorption coefficient is a measure of the soundproof effect of the material. This basically measures the percentage of sound energy is absorbed by the material.

Sound Absorption Coefficients

ASTM C423; Mounting: Type A—Material placed against a solid backing.

	Thickness		Octave Band Center Frequencies, Hz						
Product Type	in.	(mm)	125	250	500	1000	2000	4000	NRC
701, unfaced	1	(25)	0.17	0.33	0.64	0.83	0.90	0.92	0.70
	2	(51)	0.22	0.67	0.98	1.02	0.98	1.00	0.90
703, unfaced	1	(25)	0.11	0.28	0.68	0.90	0.93	0.96	0.70
	2	(51)	0.17	0.86	1.14	1.07	1.02	0.98	1.00
705, unfaced and 706 smooth surface	1	(25)	0.02	0.27	0.63	0.85	0.93	0.95	0.65
	2	(51)	0.16	0.71	1.02	1.01	0.99	0.99	0.95
703, FRK	1	(25)	0.18	0.75	0.58	0.72	0.62	0.35	0.65
	2	(51)	0.63	0.56	0.95	0.79	0.60	0.35	0.75
705, FRK	1	(25)	0.27	0.66	0.33	0.66	0.51	0.41	0.55
	2	(51)	0.60	0.50	0.63	0.82	0.45	0.34	0.60
703, ASJ	1	(25)	0.17	0.71	0.59	0.68	0.54	0.30	0.65
	2	(51)	0.47	0.62	1.01	0.81	0.51	0.32	0.75
705, ASJ	1	(25)	0.20	0.64	0.33	0.56	0.54	0.33	0.50
	2	(51)	0.58	0.49	0.73	0.76	0.55	0.35	0.65

Values given are for design approximations only; production and test variabilities will alter results. Specific designs should be evaluated in end-use configurations.

Table 28-Sound Absorption Coefficients ("700 Series Fiberglass Data Sheet," 2020)

Acoustic Concern

Fiberglass is a good sound absorption material. It is a common type of fiber-reinforced plastic (Mayer, 2012). It is widely used in house building. It is very light and has a foam-like structure. From Table 28, the fiberglass 703 has a sound absorption coefficient of 0.93 at 2000Hz. This means the sound can be reduced by 11.55 dB at 2000Hz. According to the company in-house-study, 2000Hz is the normal operating frequency (Shoufei WU*, 2016). It also has a large thermal operating range (-18 °C to 232 °C) ("700 Series Fiberglass Data Sheet," 2020).

Thus, fiberglass 703 is an ideal material for this proposal.

According to Figure 28, this design contains a layer of sound absorption material outside the compressor shell. The fiberglass layer is soft and easy to form the shape of the compressor shell. It could be stick to the outer shell of the compressor. In order to prevent overheating of the stator, the bottom of the compressor is not covered by the fiberglass. Hence, the heat generated by the compressor can be transported air convection at the bottom.

Advantages of change	Disadvantages of change
• High Sound Absorption Coefficient. • Small modification on the design. • Low manufacturing cost. • Easy to design and manufacture. • Almost no fixed cost.	• Increase Motor Temperature. • High material cost. • Increase the volume of the compressor. • The noise reduction may not be as good as expected because the bottom part is exposed.
Comments	**Risks**
Assumptions • The sound transmits through the tube and supporting structure is negligible. • The amount of dB reduction is based on the calculation of the sound absorption coefficient. • Do not need to manufacture the fiberglass. The fiberglass is obtained by the suppliers. • The ratio of material cost to manufacturing cost is 7:3.	Since the vacuum space also prevents heat transfer, there is a risk of an overheat of the stator of the motor, but it should have a better heat transfer performance than scenario 1. The heat transfer analysis will be conducted in the further section of the report.

Table 29-Scenario 3 Summary

e. Thermal Analysis

For the three scenarios, scenarios 1 and 3 could raise the center temperature of the compressor a lot, because vacuum and fiberglass are good thermal insulators. Scenario 2 has minor changes to the compressor and it almost has no effect on the heat transfer. Thus, the heat transfer of scenario 2 is assumed to be the same as the current design. According to the company representative, the most critical part of the compressor is the synchronous motor. It has the lowest temperature limit (150℃) compared with other components in the compressor and it also experiences the highest temperature in operation.

The copper stator is a main component of the motor. Hence, the stator temperature and shell temperature are two important standards to examine whether the compressor will become over-heat.

Assumptions
• The shell has a uniform temperature. • The whole compressor is at a steady state. • The heat flux is equivalent to one heat load at the center of the stator. • The overall geometry is simplified. The tubes, Mufflers, Pistons, small holes are ignored for the analysis. • All the materials are assumed based on the material library in Siemens NX. (A list of material and its thermal properties is shown in the Appendix) • The environment air temperature is 32 °C. • The efficiency of the compressor is 70%. • At a steady-state, shell temperature is 60 °C. • The oil cooling effect will reduce 5%- 10% of the temperature. • The initial temperature of all parts is assumed to be 25 °C. • The coating on the shell prevents heat transfer, so the thermal convection coefficient of air is lower than usual.

Current Design

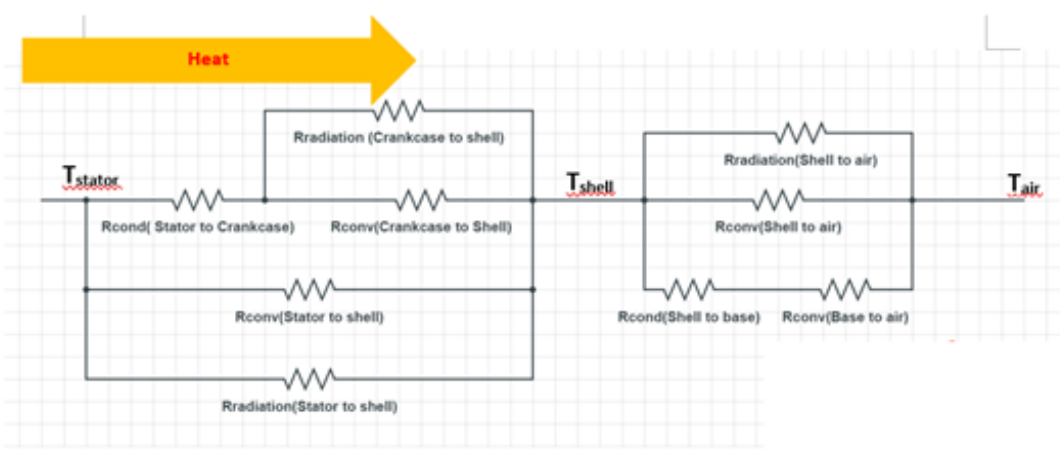

Figure 29-Heat Transfer Circuit of Single Shell

The figure above (Figure 29) shows the heat flow through the compressor. The temperature is considered as the potential of the circuit. The heat flow is the current, and the thermal resistance is the resistance of the current. In reality, there are multiple heat source in the compressor. In this analysis, heat sources are combined as one equivalent heat source at the stator of the motor. In general, heat flows from stator to the shell and to the air. The heat is mainly transferred by convection and conduction in the shell. The heat is mainly transferred by natural convection at the outer surface of the shell. In single shell compressor model, the radiation heat transfer exists but it is not the main heat transfer path.

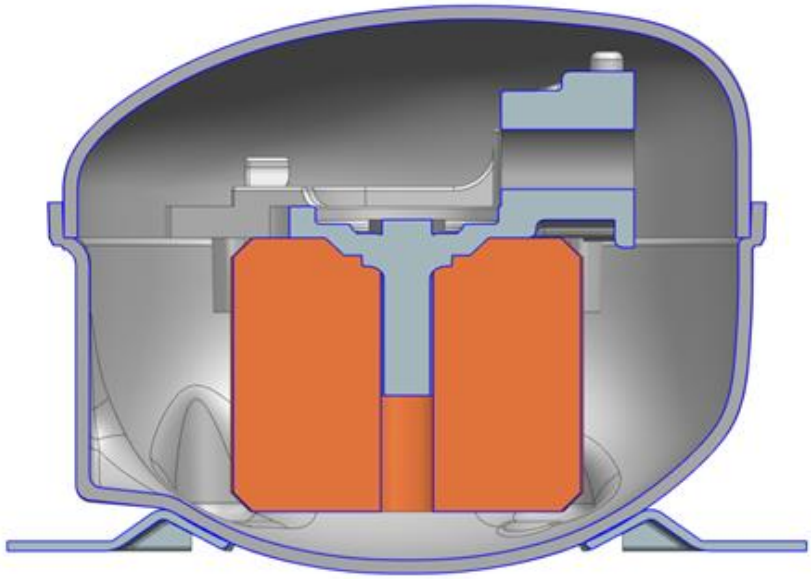

Figure 30-Simplified Single Shell Model

Due to the complexity of the model, the heat transfer analysis is performed in Siemens NX. Before performing the simulation, the compressor model can be simplified. The discharge tube, springs and muffler do not contribute much to the heat transfer, so only the casing, stator and supporter are considered in thermal analysis. As shown in Figure 30, the copper cylinder is simplified to be a cylinder shape with an equivalent heat load at the center of the stator. Because the efficiency of the compressor is about 70% and the total energy input into the system is 100W at operation, the heat load is set to be 30W.

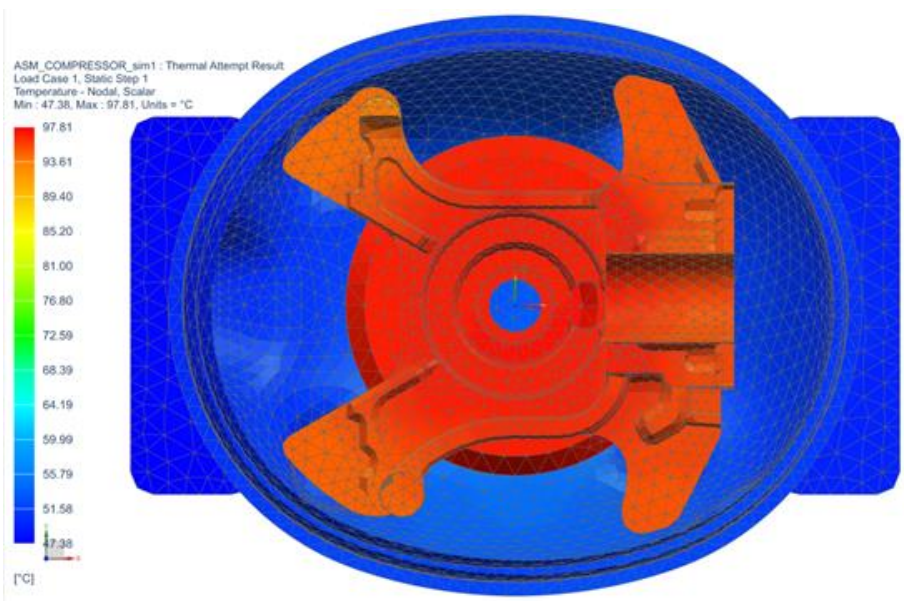

Figure 31-Temperature Distribution of Single Shell

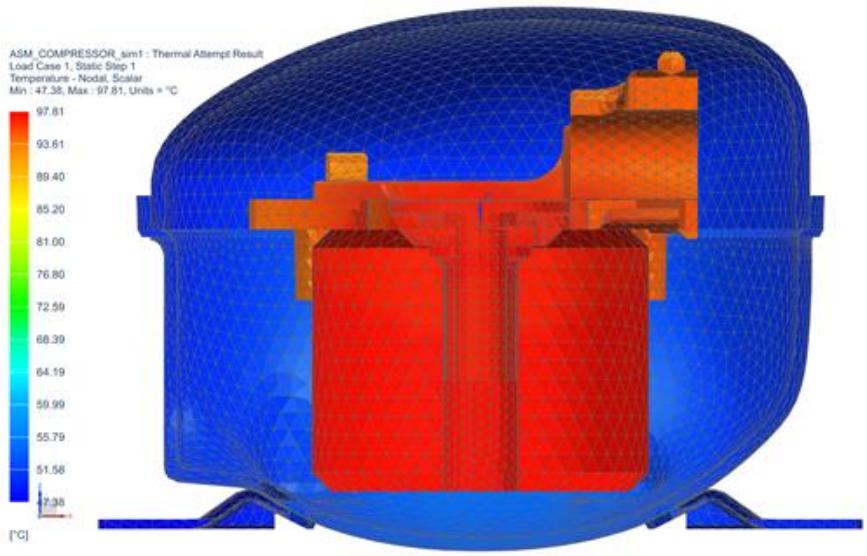

Figure 32-Temperature Distribution of Single Shell

Then, the model is put into NX to perform heat transfer analysis. The detailed thermal properties of each part are shown in Table [] in Appendix. Figure 31 shows a cross section view of the temperature distribution of the whole compressor. The center temperature of the stator is 97.81 ℃. The shell temperature is 47.38 ℃. According to the company representative, the oil can improve heat transfer and lower the temperature by 5% to 10%. Thus, the final stator temperature is about 90 ℃ and the final shell temperature is about 45℃. According to the thermal test performed by the company, the shell temperature is about 50 - 60 ℃. The center temperature is around 100 ℃ at high operating frequency. The simulation result is very close to the real test results, so the result could be set as a reference. The assumptions and boundary conditions made in this analysis are valid and can be used in the analysis of other scenarios.

Scenario 1

From the Figure 33, the double shell model is very similar to single shell model. The only difference is that the double shell has an extra outer shell and there is a vacuum space between two shells. Due to unexpected conditions and limitations, the calculation of temperature of double shell is done by hand.

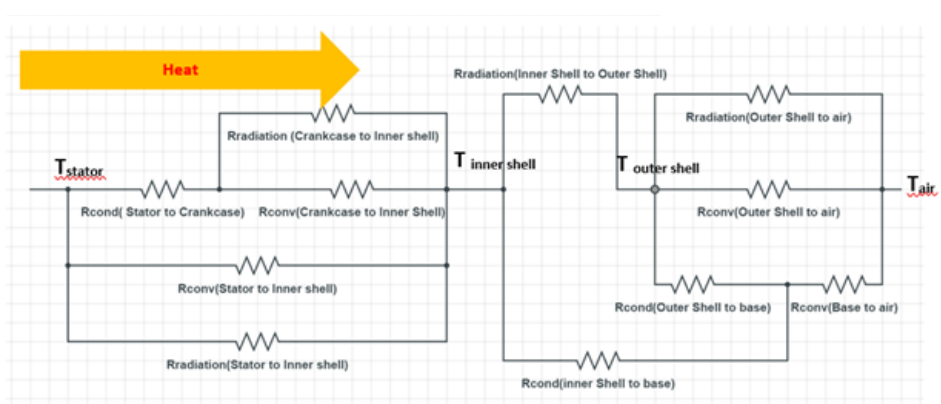

Figure 33-Thermal Circuit of Scenario 1

According to Figure 34, the heat transfer of double shell model has three stages. The first stage is heat transfer from stator to inner shell. This is the same as single shell model. The second stage is heat transfer from inner shell to outer shell. Because the space between two shells is over 90% vacuum, radiation is the main path. The third stage is heat transfer from outer shell to air. This stage is also like the second stage of single shell model.

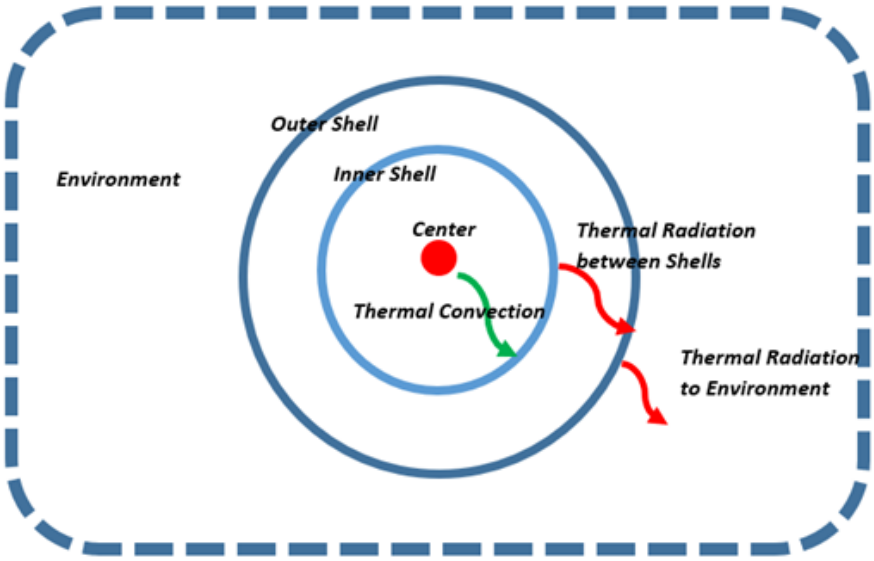

Figure 34-Simplified Model of Radiation Calculation of Scenario 1

It is very hard to calculate the center temperature of stator. Since the heat transfer inside the shell is the same as single shell model, we can only calculate the inner shell temperature. If the inner shell temperature does not rise a lot, we can infer that the stator temperature will not rise dramatically. Thus, the model is simplified as shown in Figure 34. The two shells are two spheres. The two shells are assumed to be two-surface diffuse gray enclosures (P.Holman, 2010). The environment is assumed to be infinite large and has constant air temperature. Since the air temperature is assumed to be 32 ℃, the outer shell temperature can be calculated from the specific results of small convex object in a large cavity. [] From the calculation (in Appendix), the outer shell temperature is 342.11K. After considering the oil cooling effect, the final outer shell temperature is 34.75 ℃. Then, the specific result of concentric sphere is used to determine the inner shell temperature (P.Holman, 2010). After calculation (in Appendix), the final inner shell temperature is 352.86K (79.71℃). Compared with single shell model, the inner shell temperature is about 30 ℃ higher. Thus, the stator temperature could increase 30 to 40 ℃. The predicted stator temperature is around 125 ℃. The limit of the stator temperature is 150 ℃. The temperature of the stator is still within the limit. On the other hand, the convection of outer shell is not considered. All the heat is transferred by radiation. In reality, there is a great portion of heat transferred by natural convection. Hence, the actual stator temperature will be even lower. The scenario 3 will still maintain the stator temperature in a safe region.

Scenario 3

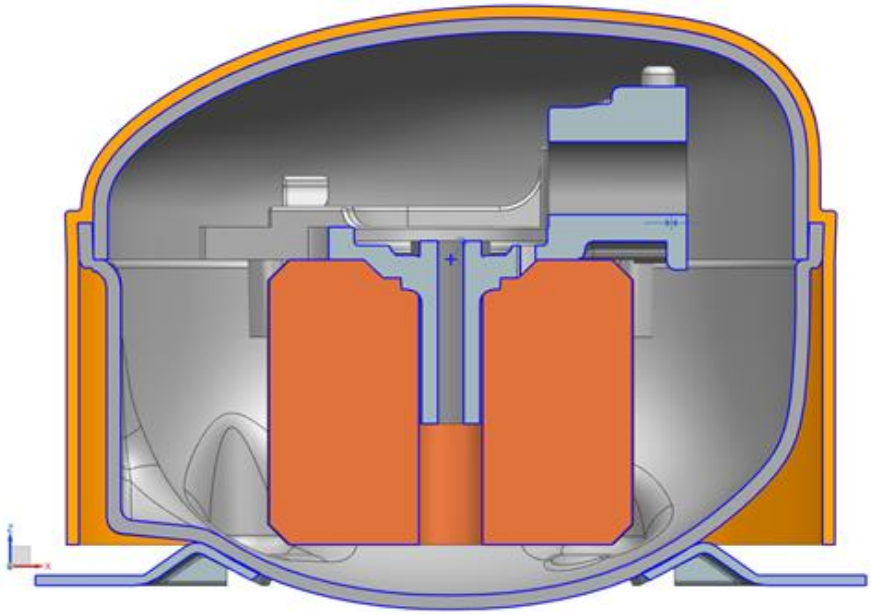

Figure 35-Simplified Model of Scenario 3

Figure 35 shows the simplified model of scenario 3. This is very similar to the single shell model. The only difference is an extra layer of the sound absorption material outside the shell. The sound absorption material directly contacts with the upper shell. There is a space between the sound absorption material and the bottom shell. The configuration inside the shell is same.

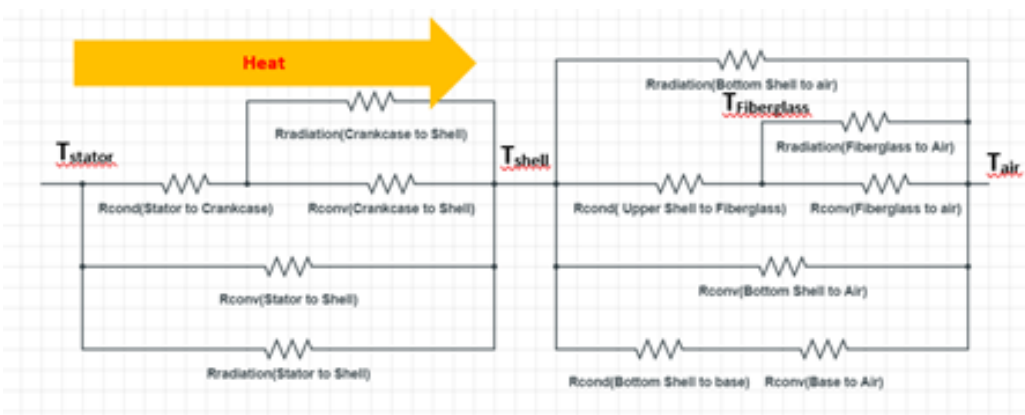

Figure 36-Heat Transfer Circuit of Scenario 3

According to the heat transfer circuit (Figure 36), the heat transfer inside the shell is same as the single shell. There are three more heat transfer paths added outside shell. The first path is direction of bottom shell to the air. The second path is thermal conduction from upper shell to fiberglass layer and convection from fiberglass layer to air. The third path is radiation from fiberglass layer to air. The radiation of fiberglass to air has minor effect in this model because natural convection should dominate.

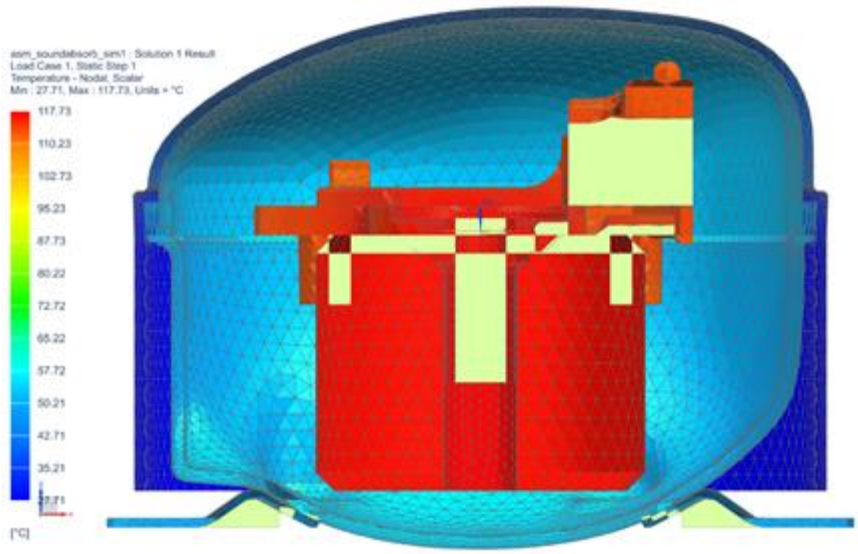

Figure 37-Temperature Distribution of Scenario 3

The model is put into NX to perform heat transfer simulation. Most of the boundary conditions, initial conditions and assumptions are same as single model analysis. The sound absorption material (Fiberglass) is created and added to the model. (Table 34 Appendix). From Figure 37, the stator temperature is 117.73 ℃ and the shell temperature is about 65.22 ℃. Considering the oil cooling effect, the final stator temperature is 108℃ and the shell temperature is about 60 ℃. Compared with the single shell compressor solution, the temperature increases about 10 - 15℃. According to the company, the maximum temperature limit of stator is 150℃. In this case, the temperature increase is acceptable and should have no effect on the motor.

f. Cost Financial Analysis

Cost analysis was conducted for the three cases and a table of breakeven is attached for the three solutions in Table 31. The detailed calculations of each solution can be found in Appendix a.

The following assumptions are made based on consulting the client below in Table 30.

Assumptions	
1.	The total number of this compressor type to be sold annually is set as 5 million despite manufacturing feasibility and market demand
2.	The sound reduction of 3 dB will increase the price of each unit by 3 RMB/60 cents CAD
3.	The material and manufacturing cost have a ratio of 7:3
4.	No new manufacturing equipment investment is required for solution 2 and 3
5.	The fixed cost is assumed to be the additional manufacturing cost
6.	Profit per unit = Unit sell price – Total cost per unit
7.	Total cost per unit includes the material cost and manufacturing cost
8.	The original profit per unit is 5% relative to the total income.

Table 30-Assumptions made for Cost Analysis

For solution 1, the fixed cost includes making a set of new molding/die, the cost estimation would be $31,000. In addition to the molding tool cost, since the cost of steel is 3.5 RMB/kg as informed by the client, for this design with 500g shell weight, the material cost/unit is estimated as 1.75 RMB/ 0.35CAD. Thus, the additional manufacturing cost to it will be 0.75 RMB/ 0.15CAD. The total fixed cost is 781,000 CAD For a 5% profit in the current product, by considering the price increase of noise reduction, the profit can be increased to 9.13%. A breakeven of 371905 units is obtained.

For solution 2, as told by the client, the discharge tube has a relatively low cost of 1 RMB/20 cents CAD. By modifying the spring and discharge tube, the material cost for each unit will be 2 RMB/40 cents CAD. Using the assumed material to manufacturing cost ratio, the manufacturing cost for each unit is estimated as 857,143 CAD. With an estimation of 50 cents CAD increase of profit, a breakeven of 535714 units is obtained.

For solution 3, market research was done on several sound absorption materials from Taobao. By comparing with prices and material sound absorption performance, sound absorption cotton was found to have a high ratio of quality against price. The price of sound absorption cotton was 42.4 RMB/m^2. The measured shell surface area was 0.09 m^2 for each unit. Therefore, the material cost for each unit would be 3.82 RMB, and the per-unit manufacturing cost would be 1.64 RMB. From assumption 1, the total fixed cost is calculated to be 8,177,143 RMB/1,635,429 CAD. And by considering the theoretical sound reduction efficiency for the sound absorption cotton for roughly 10dB, the profit can be increased from 5% originally to 9.28%. A breakeven of 764877 units is obtained.

	Solution 1: Double Shell	Solution 2: Discharge Tube & Spring Adjustment	Solution 3: Sound Absorption Material
Total Fixed Cost [CAD]	781,000	857,143	1,635,429
Unit Sale Price – Unit Variable Cost [CAD]	2.1	1.6	2.14
BEP	371905	535714	764877

Table 31-Breakeven Analysis for Three Scenarios

For payback period analysis, the original formula contains amount required for investment divide by annual revenue. However, after consulting with the advisor and client, the team decided to modify the formula for payback period calculation for a reason that the payback should depend on profit rather than revenue, and it is now equivalent to time it takes to produce number of items up to break even point. Table 32 shows the calculated payback period for the three solutions with a 28 days payback period for the double-shell solution, 40 days for the discharge tube and spring adjustment, and 56 days for sound absorption material.

	Solution 1: Double Shell	Solution 2: Discharge Tube & Spring Adjustment	Solution 3: Sound Absorption Material
Net Annual Sell×Per Unit Profit [CAD]	105,00,000	8,000,000	10,690,000
Amount Required for Investment [CAD]	781,000	857,143	165,429
Payback Period [Days]	28	40	56

Table 32-Payback Period Analysis for Three Scenarios

Table 33 shows the profit per unit and total cost increase per unit for the three solutions. The profit per unit is assumed to be equal to Unit Sale Price – Unit Variable Cost, and total cost increase is assumed to be the sum of material and manufacturing cost per unit.

	Solution 1: Double Shell	Solution 2: Discharge Tube & Spring Adjustment	Solution 3: Sound Absorption Material	Original Design
Profit per unit [%]	9.10	7.11	9.28	5
Profit per unit [CAD]	2.10	1.60	2.14	1.1
Total cost increase per unit [%]	2.42	2.73	5.22	N/A
Total Cost Increase per unit [CAD]	0.5062	0.5714	1.090	N/A

Table 33-Value Table

VII. Conclusion

Table 34-Paired Comparison Matrix constitutes a final evaluation matrix for the three proposed scenarios. This scheme serves as a comparison tool against the baseline solution. We used a paired comparison method in Table 34-Paired Comparison Matrix to determine the relative weight of each attribute in the evaluation process. Each of the seven attributes are compared to each other two by two. Among the pairing, the team determines a winning party by answering the question: "Given enough resources to enhance only one aspect of the product, which attribute shall receive the founding?" Once answered, it would be decided whether the winning attribute requires a minor, medium or major improvement. In which case, it would receive a score of 1, 2 or 3 respectively. As an example, looking at the first row totaling the score for attribute A: cost, we see that in comparison to attribute B: reliability, A warrants significantly more improvement therefore getting a score of 2. Whereas the comparison with attribute C reveals the belief that A would receive a score of 1 (minor improvement) over C. In the end, once this exercise has been repeated for each pair, the total is compiled and thus yielding the weighting of each attribute. See appendix f. for detailed breakdown.

Then, in table 34, the baseline compressor and the three new solutions are scored in the aforementioned attributes. Seven attributes have been selected. Among the seven, noise performance is the primordial criterion as it is the main focus of this project. Other important criteria are profit and marketability, cost and cooling performance. Three remaining attributes of lesser weight are reliability, dimensional footprint and ease of installation.

Here is how the total score is decided: First and foremost, the base model score is determined based on the value engineering team perception of the current model with respect to the its competiton. (Please see appendix f. for calculation logic) With the baseline established, the three proposed solutions are graded with respect to the current product. The total score obtainable is 1000. Table 35-Final Evaluation Matrix shows all three novel solutions in comparison against the baseline. A visual representation is then provided in Figure 38.

Attribute Description	Attribute	A	B	C	D	E	F	G	Score	Percent Weight
Retail cost of the compressor. Negatively affected by added parts and complexified manufacturing processes.	Cost	A	A2	A1	D2	E1	A3	G2	6	15.79
Current model needs to stay operational through a standard 20-year lifetime. The compressor should be reliable enough to necessitate no repairs.	Reliability	B	B	C1	D2	E1	B2	B1	3	7.89
Outside dimension on the compressor is a very important characteristics that strongly affects the	Dimensional footprint	C		C	D2	E1	F2	G2	2	5.26

market for said model. Therefore, the smaller a unit is, the more likely it is going to get chosen by customers.								
Base level noise of the compressor is the main attribute targeted by this project. The goal is to reduce the noise level.	Noise	D	D	D2	D3	D1	12	31.58
The cooling performance of the compressor is correlated to the amount of work the compressor put into the refrigerant. Therefore, negatively affected by changes decreasing piston efficiency and/or pressure loss.	Cooling performance	E		E	E2	E1	6	15.79
Current solution is fixed through four bolts from the bottom of the casing. A smaller exterior dimension should be advantageous to this attribute.	Ease of installation	F			F	G3	2	5.26
Current profit margin evaluated at 5%. Improving the profit margin would be possible if a better performing product is provided.	Profit and marketability	G				G	7	18.42
					Total		**38**	**100**

Table 34-Paired Comparison Matrix

	Attribute	A	B	C	D	E	F	G	Total
Items	Weight (/1000)	157.89	78.94	52.63	315.79	157.89	52.632	184.21	1000
Base model	Weighted score	110.53	67.11	42.11	104.21	110.53	47.37	92.11	573.95
Scenario 1	Weighted score	86.84	59.21	22.63	284.21	78.95	35.79	167.63	735.2
Scenario 2	Weighted score	102.63	67.11	42.11	183.16	107.37	47.37	130.79	680.53
Scenario 3	Weighted score	63.16	65.53	22.63	252.63	94.74	43.68	171.32	713.68

Table 35-Final Evaluation Matrix

a. Value Chart & Spider Diagram

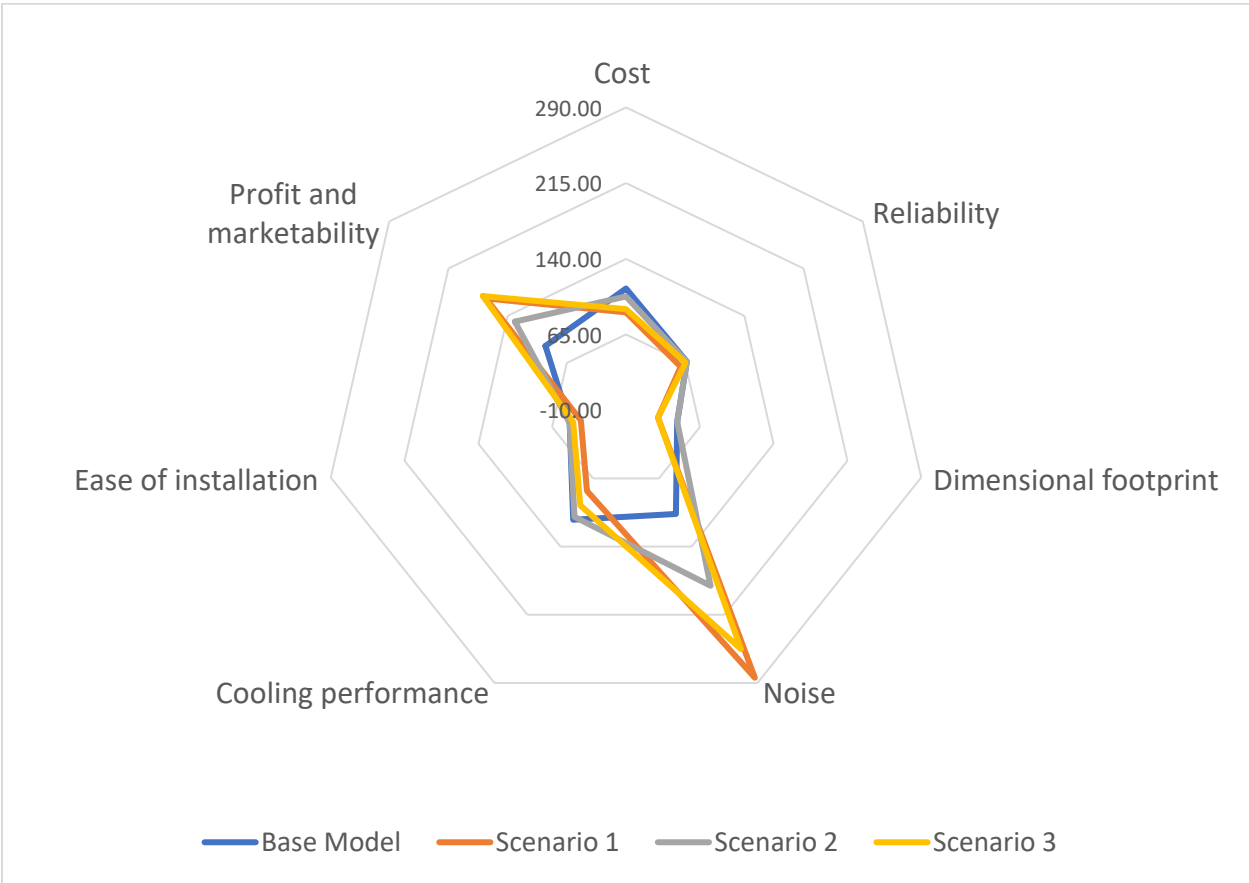

Figure 38-Solution Performance Profiles

From Figure 38, we can see an attribute comparison chart between the baseline model and each of the three solutions. At a glance, we notice the important reduction in running noise. In fact, considering the production Jiaxipera model's noise output peaks at 42dB at 4200 rpm (see Figure 2), the baseline was given a score of 20/100. Any noise level below 40dB can be considered as quiet. Therefore, based on the

noise improvement potential of each solution, a score is given on top of the base score set by our production compressor. Note that in this case, an improvement of 3dB (39dB overall is the quiet standard) would warrant a passing score of 55/100.

The profit and marketability criterion are based on the profit margin with the baseline model setting a 50/100 score. Every percent increase in profit is given 10 points. See Table 33 for profit data.

These were the two attributes directly targeted by this value engineering analysis. All remaining attributes are scored with respect to the baseline as the highest score. These include: Cost, reliability, dimensional footprint, cooling performance and ease of installation.

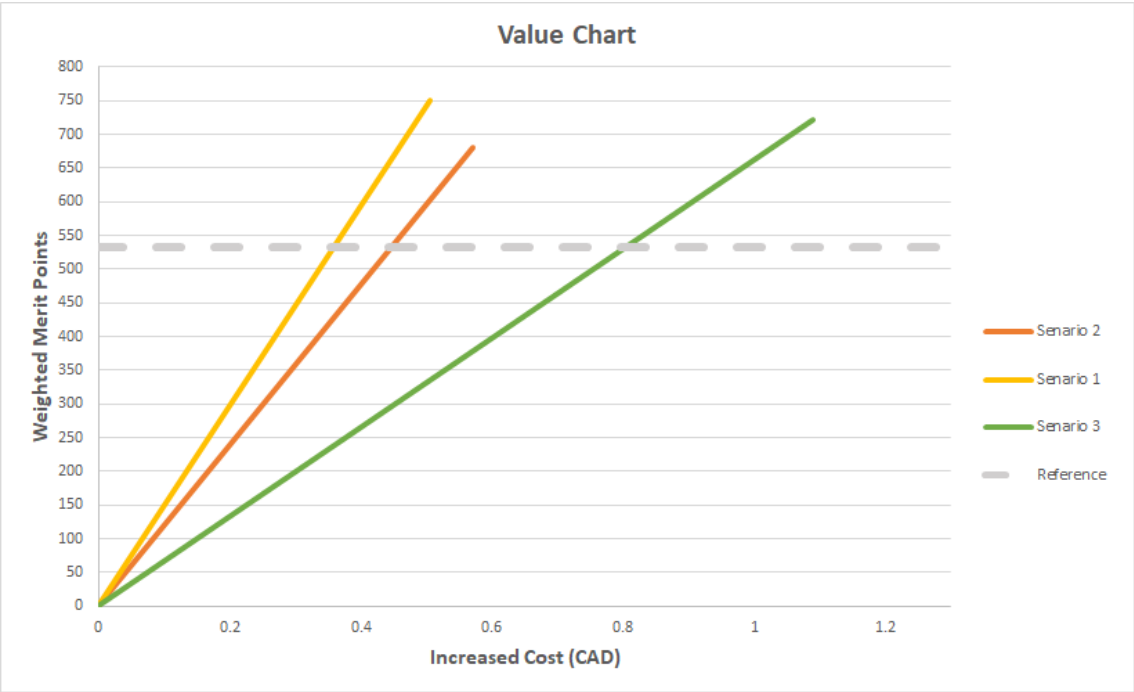

Figure 39-Value Chart

Figure 39 shows the value chart of three scenarios. The current solution is considered as the reference line. Since all three scenarios will increase the cost of the product, the horizontal axis is defined as the cost increment in cost. The vertical axis is the weighted overall merit points from the previous section. The value chart provides a clear view of the overall performance of the scenario versus cost. Overall, all solutions have higher score than the current solution. Scenario 2 and scenario 1 are very close. Scenario 1 has the best performance and scenario 1 is the most economic design among three scenarios. The fixed cost of scenario 1 is higher than scenario 2, but scenario has less modified parts and easier to manufacture. The variable cost of scenario 1 is very low which causes it has the least increase of total cost. Scenario 3 also has good performance, but its increased cost is about twice of the other two. Thus, scenario 3 is the least economic solution. Hence, from the value chart, the double shell design is the best for the company.

b. Final Recommendation

In this project, the main object is to reduce the compressor noise by 3 dB. The cost increase should also be limit around 3%. According to the sections of evaluation and development, the Scenario 1 (Double-shell Solution) has the highest weighted merit points and has the lowest cost increase. Hence, Scenario 1 is the recommended solution.

From the performance aspect, this design can reduce the noise by 6 dB which is twice of the target value. Thus, it has an outstanding noise reduction. Besides, there is a small cost increase per model. According to cost analysis, the total cost increase per model is 2.42% which is smaller than the limit. This design also adds 9.10% ~~of~~ profit~~s~~ to the product. The added profits can compensate the increased cost and adds more values to the product.

shell is of the same

Since the outer shell use the same material as the inner shell, the client does not need to find new supplier. The manufacturing method of the outer shell is the same as the inner shell. The inner configuration of the compressor is not affected. The compression ratio and durability of the compressor is not affected.

VIII. Appendices

a. Sample Calculation

The Sample Calculation for breakeven, payback period, profit and cost increase are included for the three solutions. The currency exchange rate is assumed to be 1 Chinese Yuan equals to 20 Canadian Cents.

For Solution 1:

The total fixed cost comes from making a new die/mold for the double shell design and manufacturing cost. Based on assumptions made in Table 30, the manufacturing cost and material cost have a ratio of 3:7. The market price of steel per kilogram was set as 3.5 RMB, with an estimated shell weight of half a kilogram, the per unit additional material cost is 1.75 RMB.

$$Total\ Fixed\ Cost = Mold + Additional\ Manufacturing\ Cost$$

$$Total\ Fixed\ Cost = 155{,}000\ RMB + \frac{3.5RMB}{kg} \times 0.5kg \times \frac{3}{7} \times 5 \times 10^6 = 3{,}905{,}000RMB$$

By reducing 6 dB of noise, the price can increase around 5 RMB, and Unit Sale Price – Unit Variable Cost can be expressed by equation below, this is also equivalent to unit profit.

$$Unit\ Sale\ Price - Unit\ Variable\ Cost = 110 + 5 - 110 \times 0.95 = 10.5RMB$$

Thus,

$$BEP = \frac{Total\ Fixed\ Cost}{Per\ Unit\ Profit} = \frac{Total\ Fixed\ Cost}{Unit\ Sale\ Price - Unit\ Variable\ Cost} = 371905\ units$$

For this solution, we considered manufacturing cost in addition to the total fixed cost,

$$Amount\ Required\ for\ Investment = Total\ Fixed\ Cost = 3905000\ RMB$$

By consulting with client, we modified the formula for payback period calculation, now it is equivalent to time it takes to produce number of items up to break even point (371905 units).

$$\begin{aligned} Payback\ Period_{new} &= Time\ to\ Produce\ number\ of\ Items\ up\ to\ Breakeven\ Point \\ &= \frac{Total\ Fixed\ Cost}{Net\ Annual\ Sell \times unit\ profit} \times 365\ days = \frac{3905000}{5 \times 10^6 \times 10.5} \times 365\ days \\ &= 28\ days \end{aligned}$$

$$Cost\ Increase\ Per\ Unit = \frac{(Mold\ Cost + Material\ Cost + Manufacturing\ Cost)}{unit}$$

$$= \frac{155000}{5 \times 10^6} + 1.75 + 0.75 = 2.531\ RMB$$

$$Cost\ Increase\ Per\ Unit\ [\%] = \frac{Cost\ Increase\ Per\ Unit}{Original\ Cost} \times 100\% = \frac{2.531}{110 \times 0.95} \times 100\% = 2.42\%$$

$$Profit\ per\ unit\ [\%] = \frac{Per\ Unit\ Profit}{New\ Sales\ Price} = \frac{10.5}{110 \times 0.95 + 10.5} \times 100\% = 9.13\%$$

For Solution 2:

The material cost for adjusting discharge tube and spring is set as 2 RMB/unit. Assuming a 7:3 ratio of Material and Manufacturing Cost stated in assumptions made in Table 30,

$$Additional\ Manufacturing\ cost\ per\ unit = 2 \times \frac{3}{7} = 0.857\ RMB$$

$$Total\ Fixed\ Cost = 0.857 \times 5 \times 10^6 = 4{,}285{,}000\ RMB$$

Assume sound reduction reaches 3dB for solution 2, the selling price can increase roughly 2.5 to 3 RMB for each unit. Thus, the Per Unit Profit can be expressed as Unit Sale Price – Unit Variable Cost as follows,

$$Per\ Unit\ Profit = Unit\ Sale\ Price - Unit\ Variable\ Cost = (110 + 2.5) - 110 \times 0.95 = 8\ RMB$$

$$BEP = \frac{Total\ Fixed\ Cost}{Per\ Unit\ Profit} = \frac{Total\ Fixed\ Cost}{Unit\ Sale\ Price - Unit\ Variable\ Cost} = 535625\ units$$

$$Amount\ Required\ for\ Investment = Total\ Fixed\ Cost = 4{,}285{,}000\ RMB$$

By consulting with client, we modified the formula for payback period calculation, now it is equivalent to time it takes to produce number of items up to break even point (535625 units).

Thus,

$$\begin{aligned} Payback\ Period &= Time\ to\ Produce\ number\ of\ Items\ up\ to\ Breakeven\ Point \\ &= \frac{Total\ Fixed\ Cost}{Net\ Annual\ Sell \times unit\ profit} \times 365\ days \\ &= \frac{4{,}285{,}000}{5 \times 10^6 \times 8} \times 365\ days \\ &= 40\ days \end{aligned}$$

$$Profit\ per\ unit\ [\%] = \frac{Profit\ per\ Unit}{New\ Sales\ Price} = \frac{8}{110 \times 0.95 + 8} \times 100\% = 7.11\%$$

The increased cost is a combination of material and manufacturing cost,

$$Cost\ Increase\ Per\ Unit = \frac{(Material\ Cost + Manufacturing\ Cost)}{unit}$$

$$= 2 + 0.8571 = 2.8571\ RMB$$

$$Cost\ Increase\ Per\ Unit\ [\%] = \frac{Cost\ Increase\ Per\ Unit}{Original\ Cost} \times 100\% = \frac{2.8571}{110 \times 0.95} \times 100\% = 2.73\%$$

For Solution 3:

The market price of the sound absorption material found on Taobao for the fiberglass was 42.4 RMB per square meter. And the estimated surface area measured from the given CAD shell model at 0.09 square meter.

$$\text{Sound absorption material cost} = 42.4\ RMB/m^2$$

$$Shell\ Surface\ Area = 0.09\ m^2$$

$$Material\ cost\ per\ unit = 42.4 \times 0.09 = 3.816\ RMB$$

By assuming a 7:3 ratio between material and manufacturing cost as stated in Table 30,

$$Additional\ Manufacturing\ cost\ per\ unit = 3.816 \times \frac{3}{7} = 1.635\ RMB$$

$$Total\ Additional\ Manufacturing\ cost = Total\ Fixed\ Cost = 1.635 \times 5 \times 10^6 = 8{,}177{,}143\ RMB$$

Assume the sound reduction is 10dB for this solution, which can roughly increase the price by 5 RMB.

$$Profit\ Per\ Unit = Unit\ Sale\ Price - Unit\ Variable\ Cost = (3.816 + 110) \times 5 + 5 = 10.69\ RMB$$

$$BEP = \frac{Total\ Fixed\ Cost}{Unit\ Sale\ Price - Unit\ Variable\ Cost} = 764877\ units$$

By consulting with client, we modified the formula for payback period calculation, now it is equivalent to time it takes to produce number of items up to break even point (764877 units).

Thus,

$$Payback\ Period_{new} = Time\ to\ Produce\ number\ of\ Items\ up\ to\ Breakeven\ Point$$
$$= \frac{Total\ Fixed\ Cost}{Net\ Annual\ Sell \times unit\ profit} \times 365\ days = \frac{8{,}177{,}143}{5 \times 10^6 \times 10.69} \times 365 = 56\ days$$

$$Profit\ per\ unit\ [\%] = \frac{Profit\ per\ Unit}{New\ Sales\ Price} = \frac{10.69}{110 \times 0.95 + 10.69} \times 100\% = 9.28\%$$

$$Cost\ Increase\ Per\ Unit = \frac{(Material\ Cost + Manufacturing\ Cost)}{unit}$$

$$= 3.816 + 1.635 = 5.451\ RMB$$

$$Cost\ Increase\ Per\ Unit\ [\%] = \frac{Cost\ Increase\ Per\ Unit}{Original\ Cost} \times 100\% = \frac{5.451}{110 \times 0.95} \times 100\% = 5.22\%$$

b. Thermal Constants

	Unit	Constant Value
Equivalent Heat Source	[W]	30-40
Compressor Efficiency	[%]	60-70
Convection to Air	$[\frac{W}{m^2k}]$	30
Refrigerant Temperature	$[°C]$	32.2
Refrigerant to shell Convection Coefficient	$[\frac{W}{m^2k}]$	10
Thermal Conductivity of Stator, Copper C10100	$[\frac{W}{mk}]$	391.1
Thermal Conductivity of Stainless Shell, AISI STEEL 1005	$[\frac{W}{mk}]$	53
Thermal Conductivity of crank, Iron Cast G25	$[\frac{W}{mk}]$	46
Emissivity of Stainless Shell	$[\frac{W}{m^2}]$	0.8
Emissivity of Stator	$[\frac{W}{m^2}]$	0.78
Emissivity of Crank	$[\frac{W}{m^2}]$	0.9

Table 36-Thermal Constants used in Calculation

c. Heat Transfer Calculation

The heat transfer analysis of scenario 2 and scenario 3 are done in NX. The following calculations show the heat transfer of scenario 1.

$$A = 4\pi r^2$$

$$A_{inner\ shell} = 0.09m^2$$

$$r_{inner\ shell} = 0.0846m$$

$$shell\ gap = 1.608mm, shell\ thickness = 3mm$$

$$r_{outer\ shell} = 0.0846 + 0.001608 + 0.003 = 0.08861m$$

$$-6dB = 10\log_{10} I_1 / I_2$$

$$\frac{I_1}{I_2} = 0.25$$

Thus, 75% of energy is transferred into heat and 25% remains as sound energy.

$$q = 30 * 0.75 = 22.25W$$

$$q = \sigma A_{outer\ shell}\epsilon_{steel}\left(T^4_{outer\ shell} - T^4_{air}\right)$$

$$22.5 = 5.67 * 10^{-8} * 0.9866 * 0.8 * \left(T^4_{outer\ shell} - 305.15^4\right)$$

$$T_1 = T_{outer\ shell} = 342.11K$$

Due to the oil cooling effect, 10% of the outer shell temperature is reduced.

$$T_{outer\ shell} = 342.11 * 0.9 = 307.899K = 34.75℃$$

$$q = \frac{\sigma A_{inner\ shell}(T^4_{inner\ shell} - T^4_{outer\ shell})}{\frac{1}{\epsilon_{steel}} + \frac{1-\epsilon_{steel}}{\epsilon_{steel}}(\frac{r_{inner\ shell}}{r_{outer\ shell}})\text{^}2}$$

$$22.5 = \frac{5.67 * 10^{-8} * 0.09 * \left(T^4_{inner\ shell} - 307.899^4\right)}{\frac{1}{0.8} + \frac{1-0.8}{0.8}\left(\frac{0.0846}{0.08861}\right)^2}$$

$$T_{inner\ shell} = 352.86K = 79.71℃$$

d. Different Compressor Mechanisms

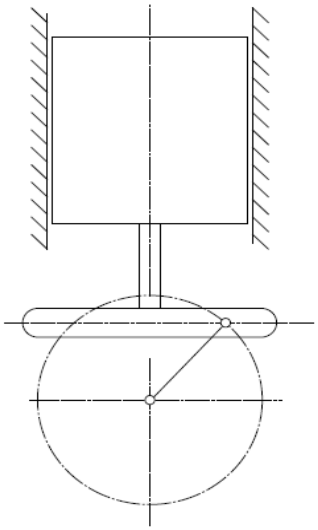

Figure 40-Slider-Crank Mechanism

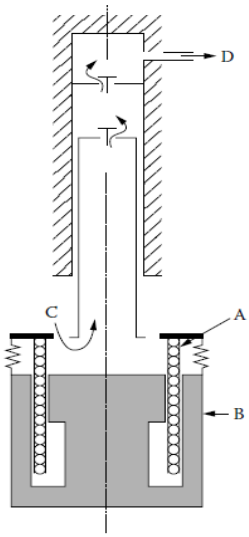

Figure 41-Reciprocating Swing Compressors

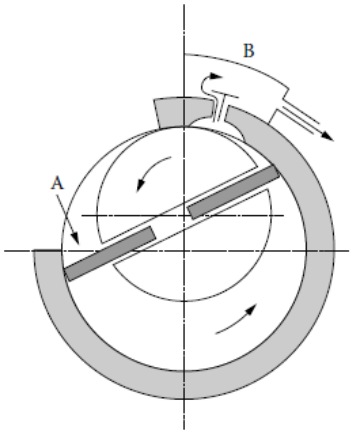

Figure 42-Rotary Vane Compressors

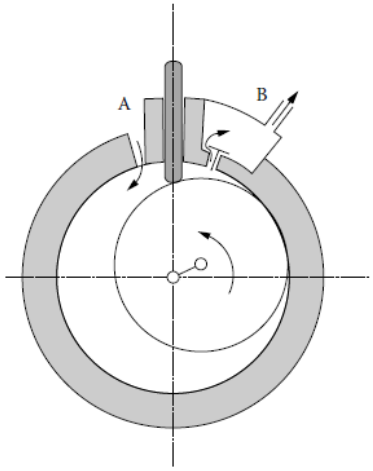

Figure 43-Rolling Piston Compressors

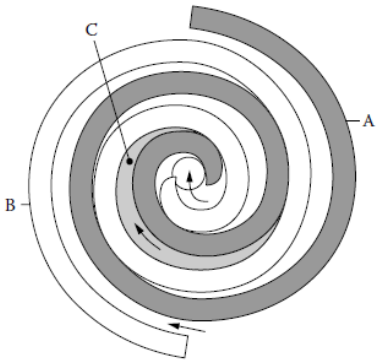

Figure 44-Scroll Compressors

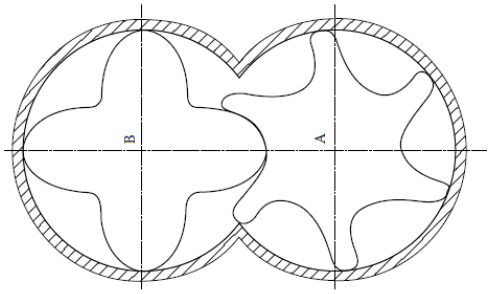

Figure 45-Screw Compressors

e. Thermal Modeling Mesh Elements

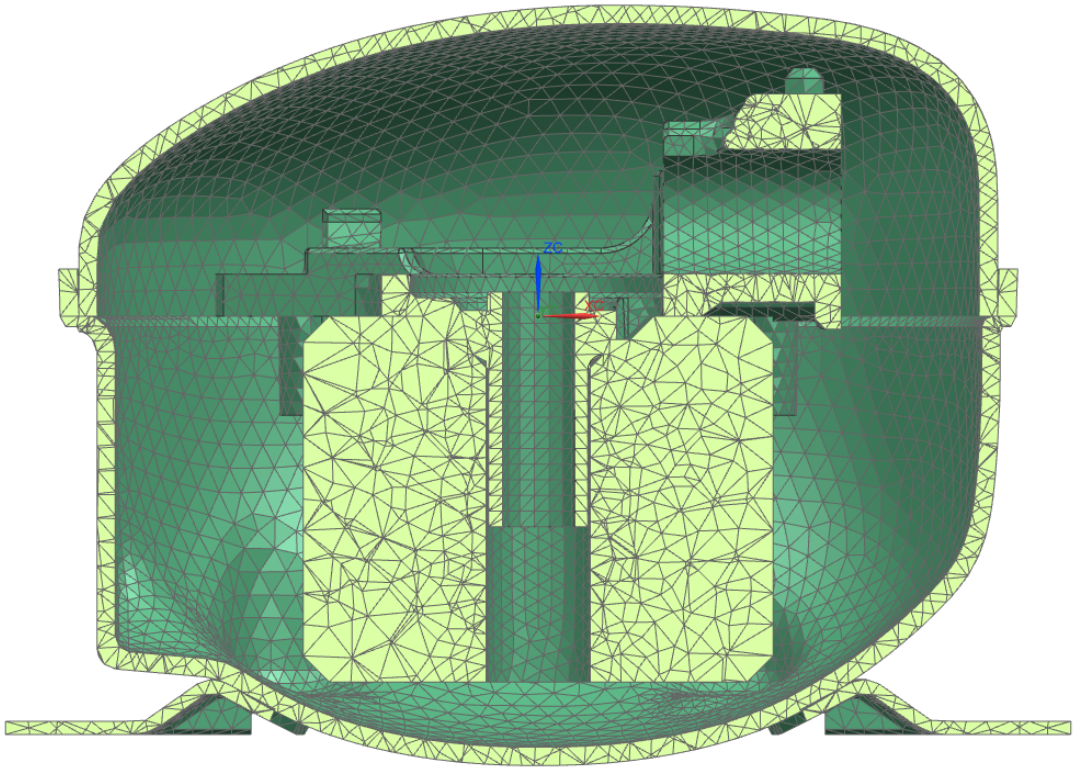

Figure 46-Standard Assembly NASTRAN Mesh Elements Cross-Section

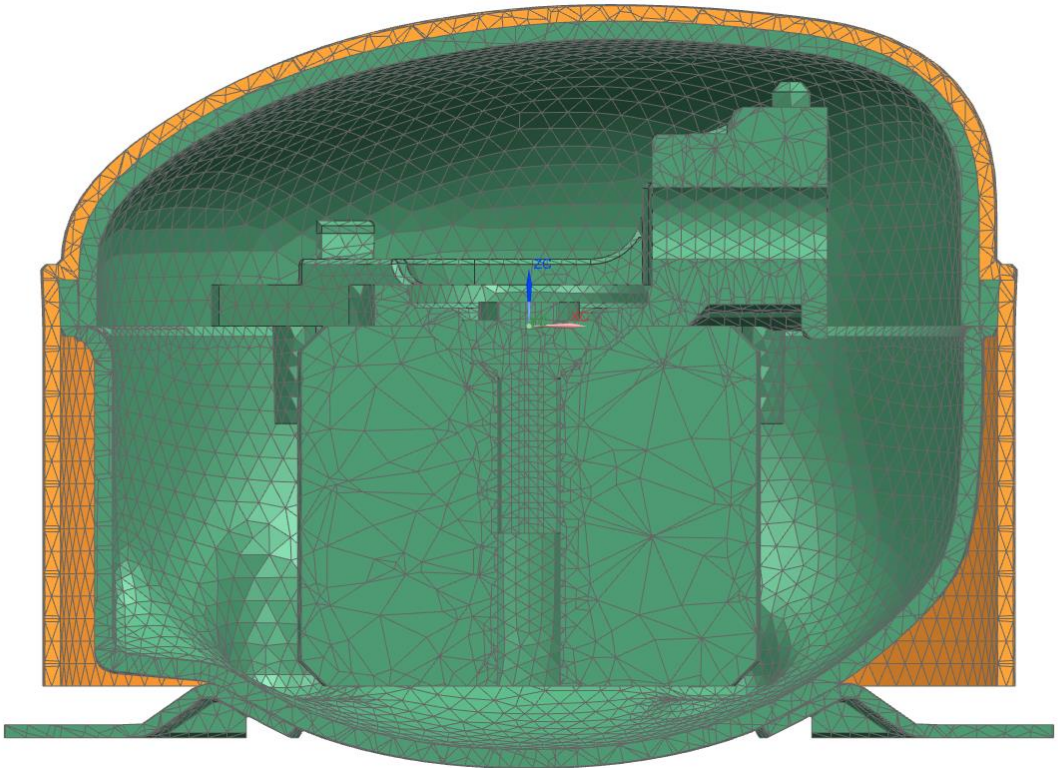

Figure 47-Damped Outer Shell Assembly Mesh Elements

f. Final Recommendation Calculation samples

The conclusion section offers final recommendations given by the team. In hope to clarify the method used arriving to those recommendations.

Attribute description		A	B	C	D	E	F	G	Score	Percent weight
Cost	A	A	A2	A1	D2	E1	A3	G2	6	15.79
Reliability	B		B	C2	D2	E1	B2	B1	3	7.89
Dimensional footprint	C			C	D2	E1	F2	G2	2	5.26
Noise	D				D	D2	D3	D1	12	31.58
Cooling performance	E					E	E2	E1	6	15.79
Ease of installation	F						F	G3	2	5.26
Profit and marketability	G							G	7	18.42
								Total	38	100

Figure 48-Paired Comparison Tally Process

From figure 48, the total number of score given is 38 thus giving us the following weight for each category:

- Cost:

$$A_{tally} = 2 + 1 + 3 = 6$$

$$A_{weight} = \frac{A_{tally}}{Total} = \frac{6}{38} = 15.79\%$$

- Reliability:

$$B_{tally} = 2 + 1 = 3$$

$$B_{weight} = \frac{B_{tally}}{Total} = \frac{3}{38} = 7.89\%$$

- Dimensional footprint:

$$C_{tally} = 2$$

$$C_{weight} = \frac{C_{tally}}{Total} = \frac{2}{38} = 5.26\%$$

- Noise:

$$D_{tally} = 2 + 2 + 2 + 2 + +3 + 1 = 12$$

$$D_{weight} = \frac{D_{tally}}{Total} = \frac{12}{38} = 31.58\%$$

- Cooling performance:

$$E_{tally} = 1 + 1 + 1 + 2 + 1 = 6$$

$$E_{weight} = \frac{B_{tally}}{Total} = \frac{6}{38} = 15.79\%$$

- Ease of installation:

$$F_{tally} = 2$$

$$F_{weight} = \frac{F_{tally}}{Total} = \frac{2}{38} = 5.26\%$$

- Profit and marketability:

$$G_{tally} = 2 + 2 + 3 = 7$$

$$G_{weight} = \frac{G_{tally}}{Total} = \frac{7}{38} = 18.42\%$$

Now, moving on to the performance matrix. Starting by determining the baseline commercial model's score. First the cost scale is obtained by guidance of a research of the unit price for similar r600a air

conditioning and refrigeration compressors on Alibaba.com. It was seen that typical unit price range from $25 to $58. Then assuming a linear scoring scale the following is obtained:

$$Score = -\frac{100}{(58-25)} \cdot (Price - 25) + 100$$

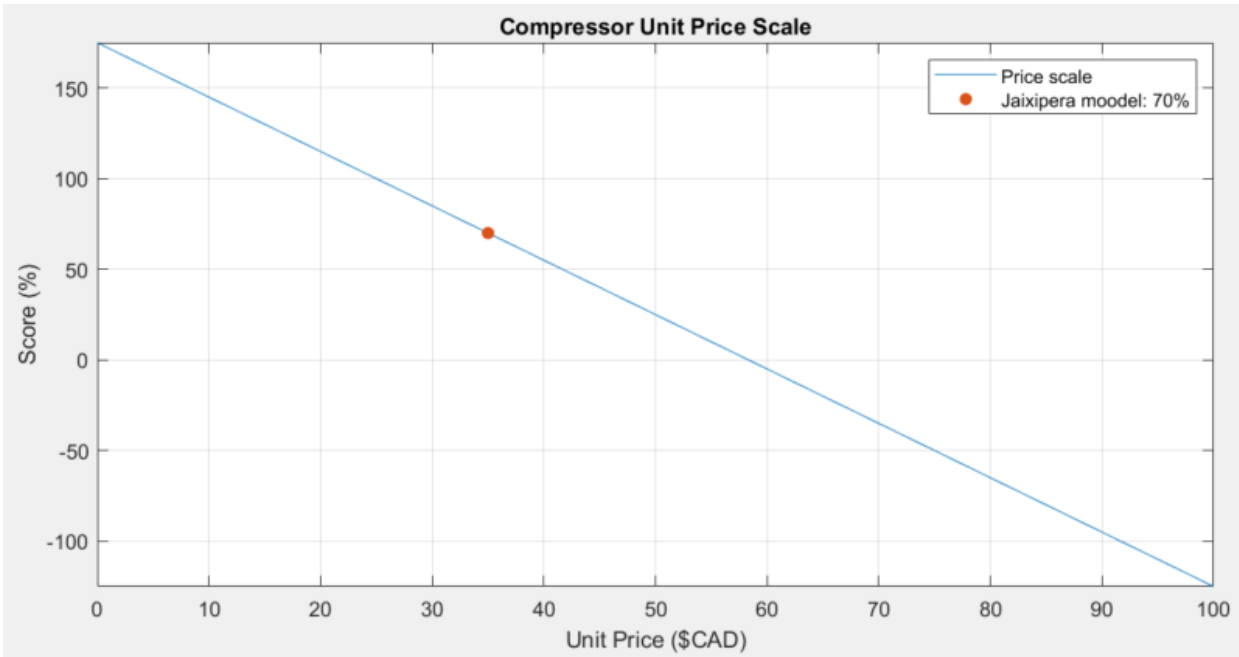

Figure 49-Linear Cost Estimator (Based on Unit Retail Price)

Jiaxipera's model was found with a retail price of $35. Which give it a score of 70%. Then the weighted score considering of its cost is then:

$$Base\ Model_{cost} = \frac{157.9}{1000} \cdot 70\% = 110.53$$

Reliability is much harder to get a clear idea of with limited understanding of the history of model. Therefore, with the search for realiability concerns and recall coming up empty, the team believes that the current model is deserving of an A grade or 85%. Therefore, the weighted score comes up to:

$$Base\ Model_{reliability} = \frac{78.95}{1000} \cdot 85\% = 67.11$$

In terms of dimensional footprint, an open analysis of the model at hand revealed very little room for improvement is the current compressor layout is to be kept. However, there does exist model of various compression mechanism that have a much smaller form factor. For those reasons, the base compressor is given a score of 80% which translate into a weighted score of:

$$Base\ Model_{footprint} = \frac{52.63}{1000} \cdot 80\% = 42.11$$

Noise performance is the primary focus of this project. Its dominance is reflected by the significant weight in the decision matrix. In deciding on a base score for the commercial model, it is found that household refrigeration compressors often perform in a noise range of 32-47 dB. The operational point of the Jiaxipera model is taken at the peak value of 42 dB. The linear scaling equation is given as:

$$Score = -\frac{100}{(47-32)} \cdot (Op.noise - 32) + 100$$

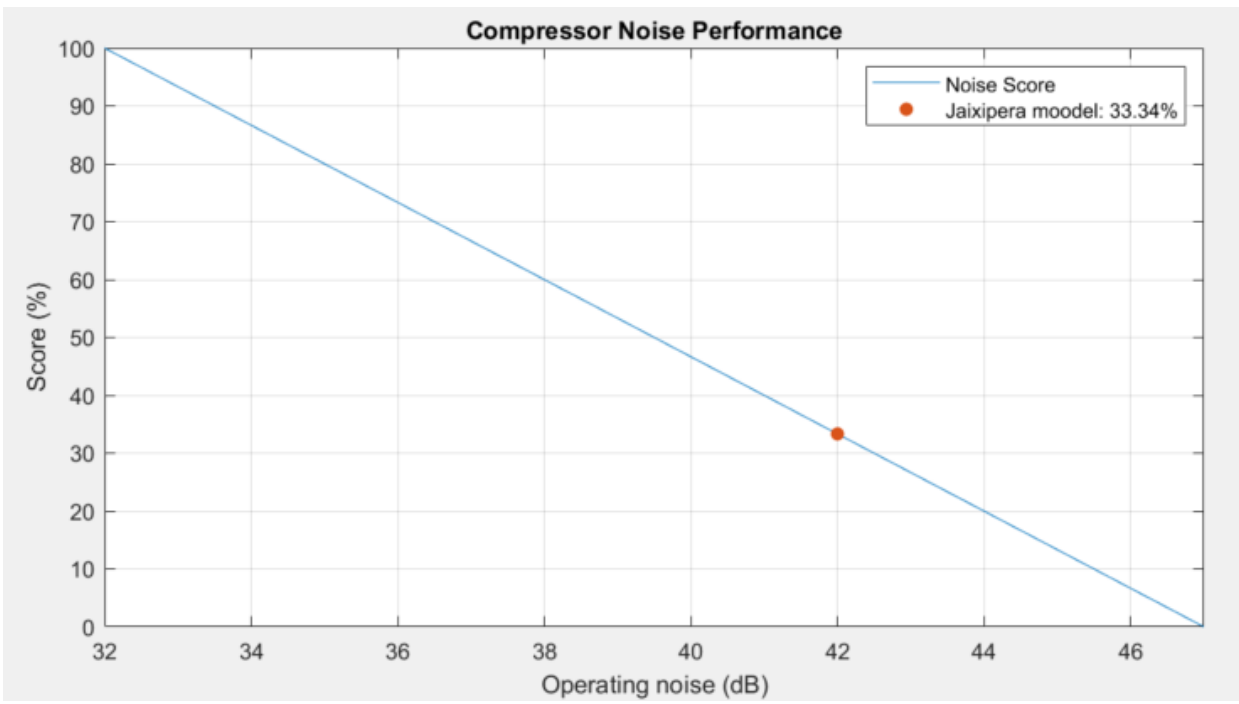

$$Base\ Model_{noise} = \frac{157.9}{1000} \cdot 70\% = 110.53$$

Ease of installation for the base model is given a high score of 90%. Such decision is influenced by the mounting option and is related to the dimensional footprint as well where a smaller footprint would increase this rating. Now since the four-point groumet fitted mounting points is the industry standard option, there is no reason to fault said layout. The weighted score is: gromet

$$Base\ Model_{instal.} = \frac{52.63}{1000} \cdot 90\% = 47.37$$

cimnbine=combined?

The profit and marketability criteria is a cimnbine metric evaluating the profit margin fo the product as well as the features and benefit enhancing its marketability. Information provided by the client indicated a profit margin of roughly 5%. Therefore, a score of 50% is given to the base model. Here is the weighted score:

$$Base\ Model_{nosie} = \frac{184.21}{1000} \cdot 50\% = 92.11$$

At last, please note that the above evaluation is entirely based on the team's current understanding of the product and compressor industry. Hopefully, the conclusions and method used can be of used for Jiaxipera in pursuing superior compressor performance.

IX. Reference

1. 700 Series Fiberglass Data Sheet. (2020). Retrieved from https://www.owenscorning.com/insulation/products/700-series-fiberglas-insulation
2. Mareze, P. H., Lenzi, A., & Pellegrini, C. (2012). Rigid-frame porous material acoustic attenuation on compressor discharge.
3. Mayer, R. M. (2012). *Design with reinforced plastics: a guide for engineers and designers*: Springer Science & Business Media.
4. P.Holman, J. (2010). *Heat transfer. 10th edn*: McGraw Hill Higher Education
5. Shoufei WU*, J. S., Gaowei SHEN. (2016). *Study on the Contribution of Compressor noise to Refrigerator Overall Noise*. Paper presented at the 23rd International Compressor Engineering Conference Purdue.
6. Soedel, W. (2007). *Sound and Vibrations of Positive Displacement Compressors*: Taylor and Francis Group.
7. Torvik, P. J. (2007). *Analysis of free-layer damping coatings.* Paper presented at the Key Engineering Materials.
8. Walters, S., & Dance, S. (2014). *Noise control potential of vacuum isolation panels.* Paper presented at the INTER-NOISE and NOISE-CON congress and conference proceedings.
9. WANG, F., WANG, L.-c., WU, J.-g., YOU, X.-h. J. R., & Development. (2007). Sound absorption property of open-pore aluminum foams.