Design Graphics Project '06

(MECH289)DGP6W5Cq.tex

December 29, 2005

1 Introduction

One may read about the various phases of *The Design Process* in popular engineering design graphics texts like Bertoline or Earle. It proceeds from identifying the problem in terms of broad requirements through the stages of generating ideas, refining them, choosing among a number of "short-listed" options and finally generating the documentation necessary to produce the deliverable product or system. Our aim in this project is narrower and will focus on activity of the "Chief Designer" (me) and his "Team" (you). This will provide an opportunity to develop and practice skills in graphical communication of ideas and information. In the end you will generate a set of working drawings that constitutes a legal contract when mutually approved by the responsible design engineering management and the corresponding executives of the contractor who is to carry out the project implementation. The product in question is a 4 : 1 bevel gear reducer whose input and output shaft axes are offset (non-intersecting) and skew (not parallel). It has been assigned to the team whose members have, like any section of society, widely differing degrees of talent and experience. Furthermore there is no question of designing, say, an energy efficient sports car because that seems more appealing. We gotta eat and this our task at hand and we've gotta make the best possible job of it.

2 Design Sketches

- Design sketching covers a range of activity from rough idea developments in freehand to rigorously scaled and symmetrically sectioned sets of conjugate view pairs that look much like unfinished assembly drawings. (See **Working Drawings**, below.)
- Graphical communications describe planned or existing systems. "Reverse engineering" is meant to describe something that exists in order to understand its workings so that it may be maintained, copied (legally or otherwise) and/or improved. Our moot (as in "moot court" wherein student lawyers practice) project involves design of a fairly common mechanical unit, a gear reducer.
- A variety of these are available commercially from firms that make it their speciality. If you can buy a unit that meets the specifications, laid down in (289Projt)DL5Cn_1, "buy" it. *I.e.*, document it properly in terms of the catalogue drawings, illustrations and vital statistics, *e.g.*, price, weight, outline "footprint" and key installation dimensions. This will constitute your design project. However no two teams of three members (or less) may come up with a product from the same source.
- Graphical communication may, like design sketches, never leave the design office. They are meant chiefly for designer self-communication or communication among close colleagues. Ideas and features can be developed, exchanged and clarified in "real time" and with "off-the-cuff", "back-of-the-envelope" auxiliary sketches.
- Let us now turn to the six design sketches and sample, unfinished detail drawing that the Chief Designer has worked up and distributed to the Team.

2.1 (289Projt)DL5Cn_0

This is the first sketch created. When the Designer got the assignment he was told that the input would be about 1kW at about 1500rpm, that the output shaft must turn at one quarter of this speed, or about 375rpm, with its axis a distance of 250mm below the input shaft axis and making a deflection angle of 45° to the right. This design layout shows a plan and two elevation views of the centre lines of the input and output shafts and that of the intermediate shaft axis centre line on the common perpendicular between the other two. Frustrated pitch cone surfaces of two pairs of proposed 2:1 bevel gear sets are also shown.

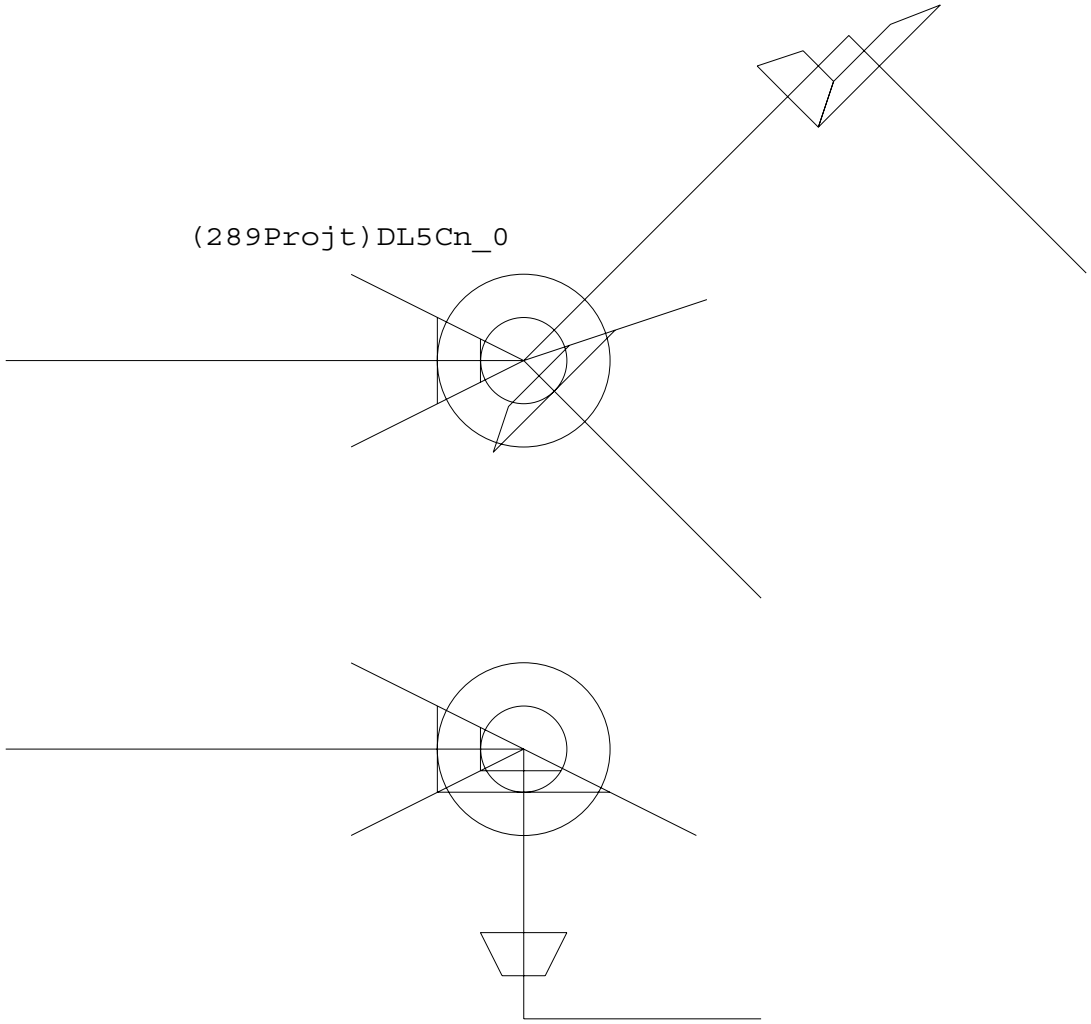

Figure 1: Centre Lines and Pitch Cones

2.2 (289Projt)DL5Cn_1

The information in the first sketch is made explicit with the key distance and angle shown. The bevel gear face geometries have been (tentatively) defined. The Designer's thoughts are beginning to take shape.

2.3 (289Projt)DL5Cn_2

Gear hubs and shafts have been added. Note that the input shaft diameter of 20mm was chosen somewhat arbitrarily but the successive diameters of 26 and 32 were derived as approximately

$$26 \approx 20(2^{\frac{1}{3}}), \;\; 32 \approx 20(4^{\frac{1}{3}})$$

to correctly scale the required increase in torque capacities required of the intermediate and output shafts.

2.4 (289Projt)DL5Cn_3

Shafts must be supported and the machinery enclosed. A double wall separates the input and output gear pairs. A pair of ball bearing units support the intermediate shaft. Visions of snap-rings and spacers dance in my head

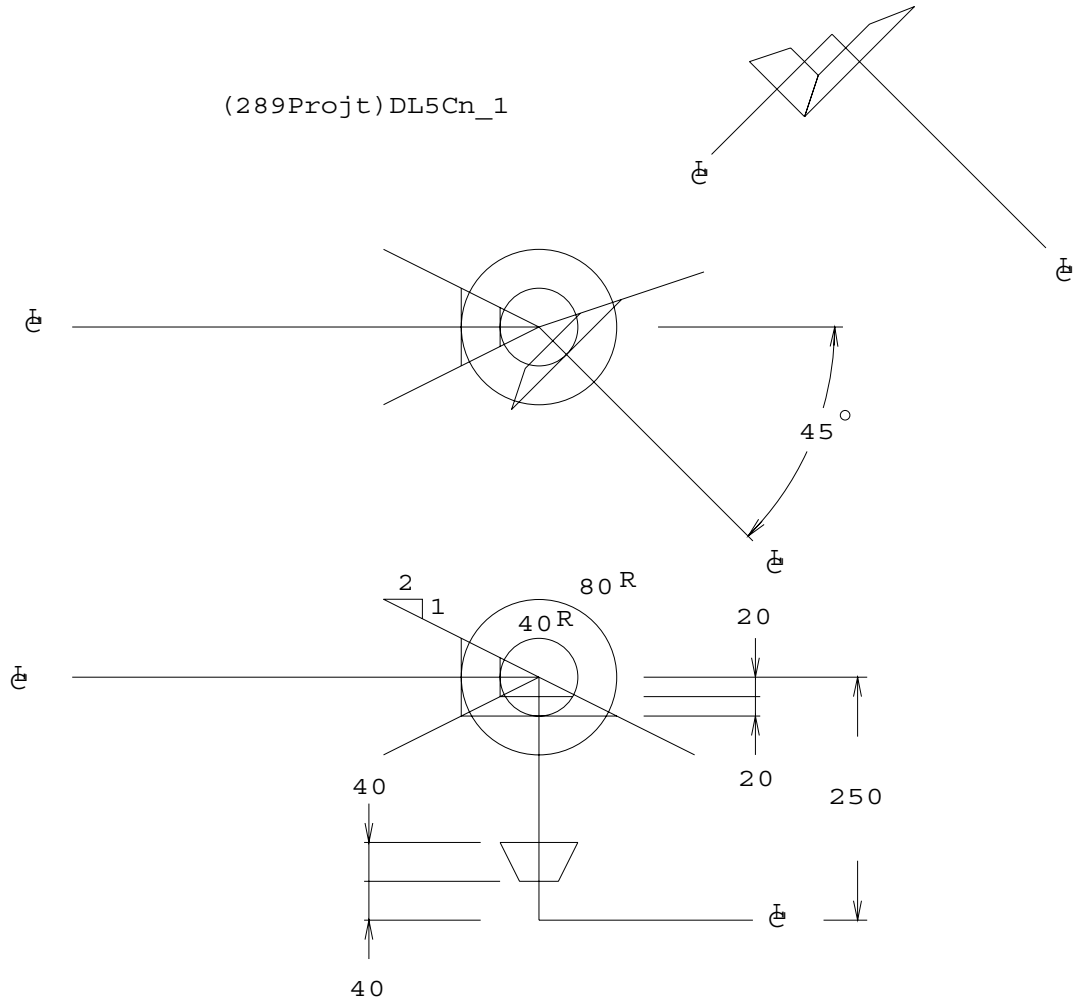

Figure 2: Some Key Shapes and Sizes

along with keys, splines and taper-pins. A thick-walled tube might make a nice box into which everything goes. A stepped cap might go on top.

2.5 (289Projt)DL5Cn_4

A stepped bottom plate is added. It has sufficiently large diameter to serve as a base with holes to bolt it to the machinery that will use this reducer. The double walled septum is also stepped, to go into the tube halves, and is sandwiched between two smaller bearing retaining plates. An attempt is made to configure the input shaft bearing assembly. Should it be screwed into or bolted to the outside of the tube wall? Things do not look so good in this regard.

2.6 (289Projt)DL5Cn_5

It has all come together here. The input support assembly shows a suggested bolted-on arrangement while the output bearing sleeve is shown as threaded into the tube wall. Socket head Allen screws are proposed to attach the base and cover plates to the tubular housing. Septum halves are similarly integrated with upper and lower housing halves. The intermediate shaft bearing plates are held with smaller Allen screws. Although upper and

lower housing halves are shown bolted in the same way as in the other four cases, use of tapered dowel pins (not shown) or some similar arrangement is necessary to ensure proper location. Oil seals are necessary. These may take the form of O-rings, flat gaskets, *etc.*

2.7 (289Projt)DT5Co_1

One working (detail) drawing has been partially developed. This one was chosen because it is the simplest detail. Will it require simple or geometric tolerancing? Finish on the contacting face is definitely indicated. Notice that all dimensions have been specified but the material stock has not. A proper detail needs border and title-block. It must, in principle, contain all information necessary to produce that component without recourse to any requests for additional information or clarifying explanation.

3 Working Drawings

A set of working drawings(SWD) pertains to a specific project. In our context the project is to produce a set sufficient to produce a 4 : 1 bevel gear speed reducer unit. The set usually contains assembly and detail drawings(DD). A general assembly drawing(GAD) will usually cite a number of subassembly drawings(SAD), some DDs and will contain a bill of material(BoM) that lists BIs, "bought items" like fasteners, an electric motor, rolling element bearings, *etc.* Roughly the same criteria apply to an SAD. A properly trained millwright-rigger crew can, given an SWD and the parts pertaining to various DDs and BIs arrayed on the shop floor, put the machine together, adjust it as required and verify its satisfactory operation. Fig. 6 is reproduced as Fig. 8. It contains reference to SAD 573, the input shaft bearing assembly, and DD 57028, the bearing retaining plate described in Fig. 7. Furthermore BI (04) is "called-up" as it might appear in an actual BoM. Note than none of the design sketch illustrations included in the article are complete, properly presented elements of an SWD. Completion of the design task and producing an acceptable SWD is your job. Here are some pointers to help you keep track of things.

- I cite SWD numbers with a broken arrow to clearly differentiate these from BIs that ar called up with an encircled number or "balloon".
- I cite GADs with two or three digit numbers. It seems reasonable that a small custom machinery building company might have no more than 100 (or possibly, 1000 on the outside) projects within a 10-year planning horizon. A GAD may be assigned a number like 57 if it's the 57th project.
- Each GAD project is unlikely to need more that 10, possibly 100, SADs. So these get, if we opt for 100 and 10, numbers like 573 if it's the third SAD on project 57.
- The DD above is numbered 57028 because one may assume it belongs to project 57 but appears on the GAD and not on an SAD, hence 570. Assuming that there are 28 or more details connected with this project, accounts for the last two digits of the DD number.
- Note the call-up of the Allen screw (04).

(MECH289)DGP6W5Cq.tex

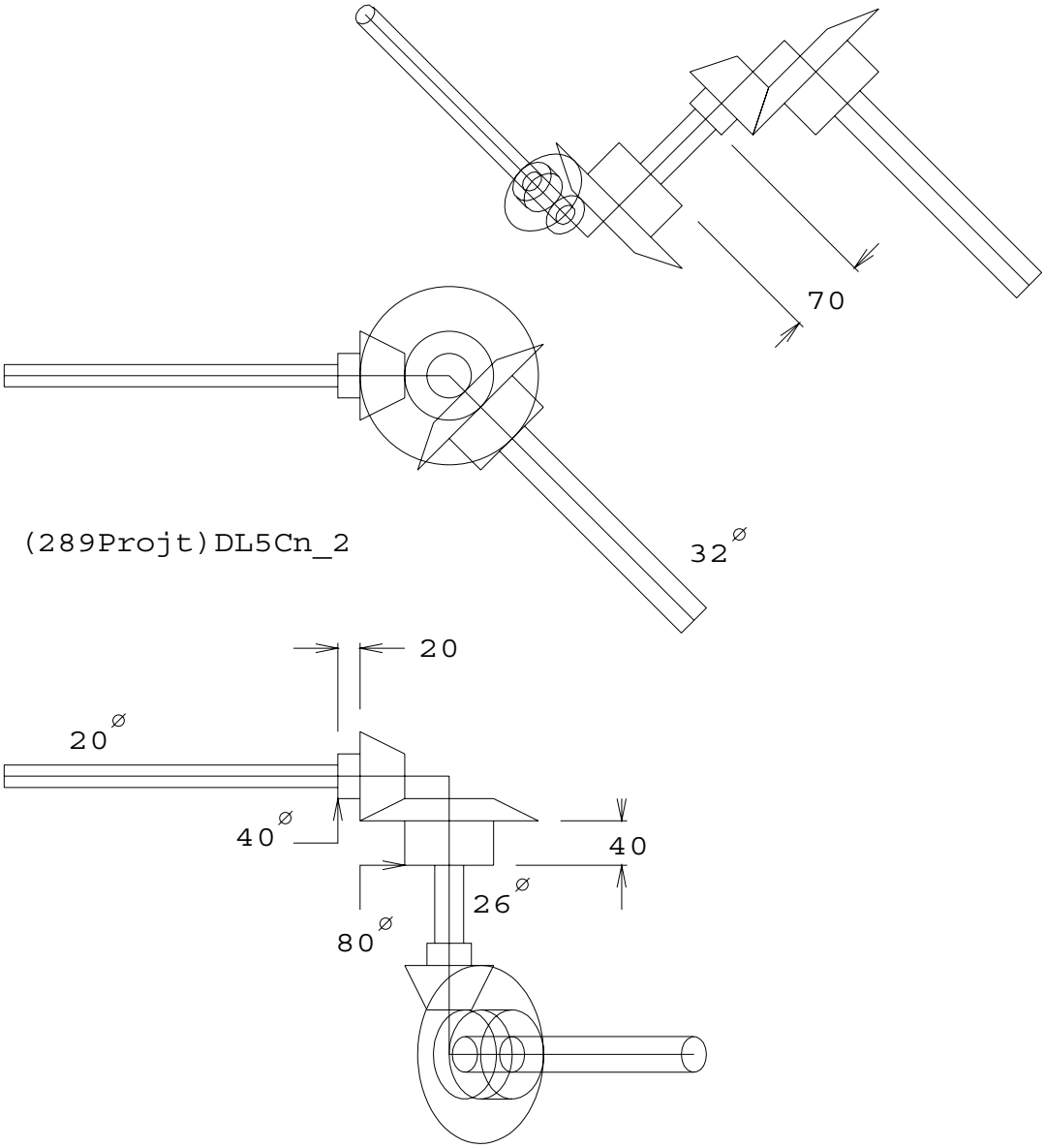

Figure 3: Shafts and Gear Hubs

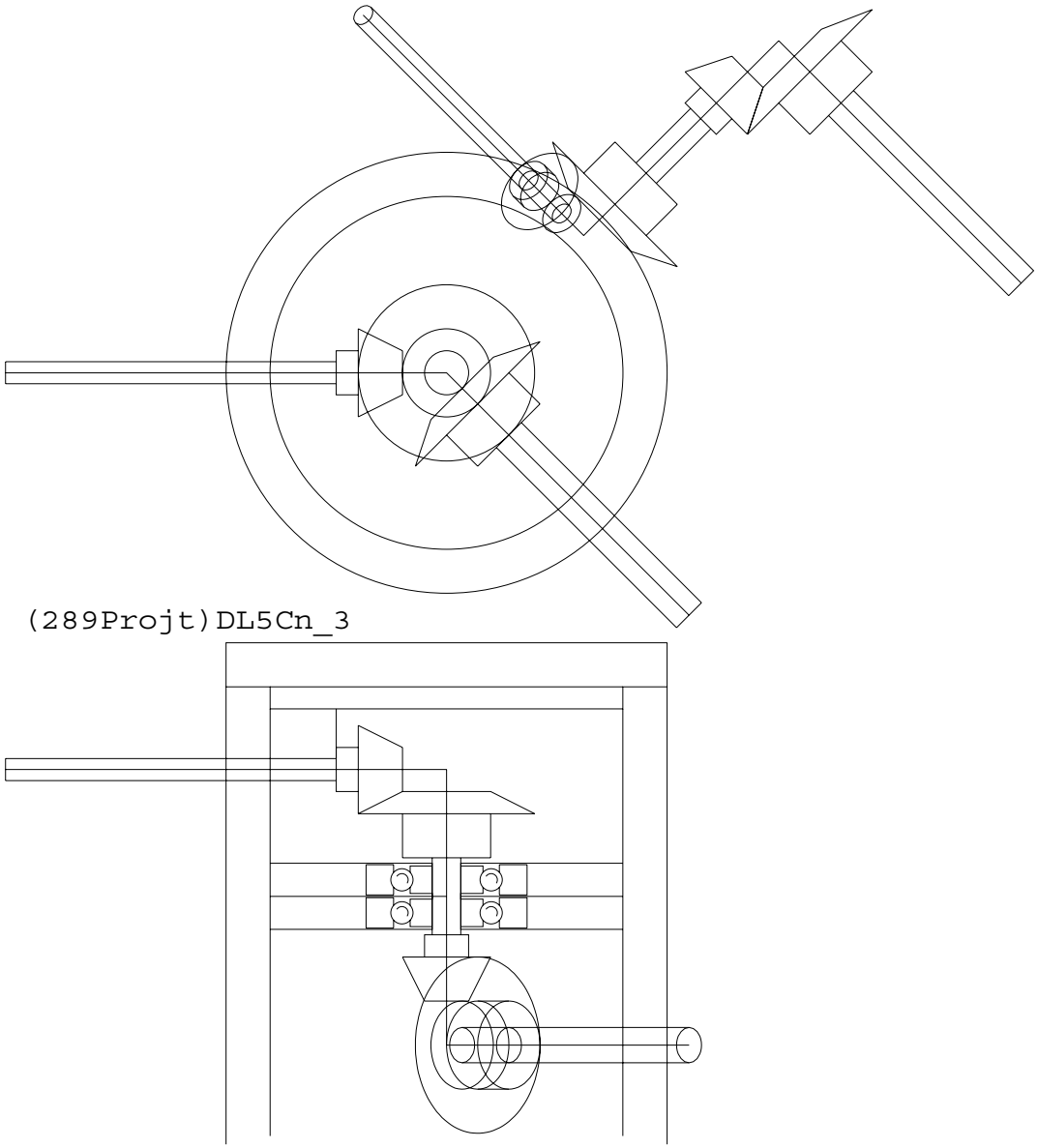

Figure 4: Cylindrical Enclosure and Septum Supporting Intermediate Shaft

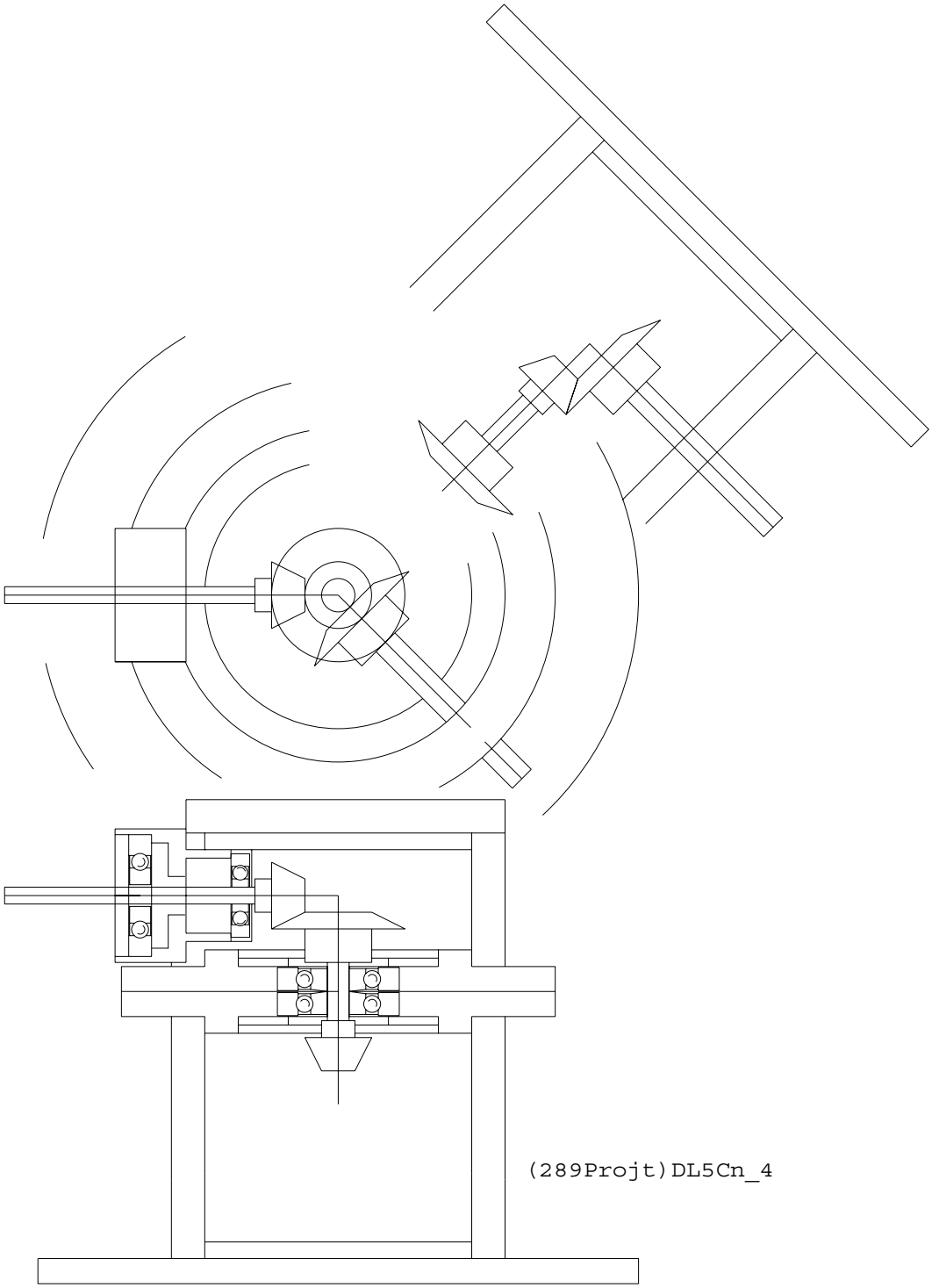

Figure 5: False Start on Input Shaft Bearing Assembly and the Septum is Split for Possible Variable Offset Angle

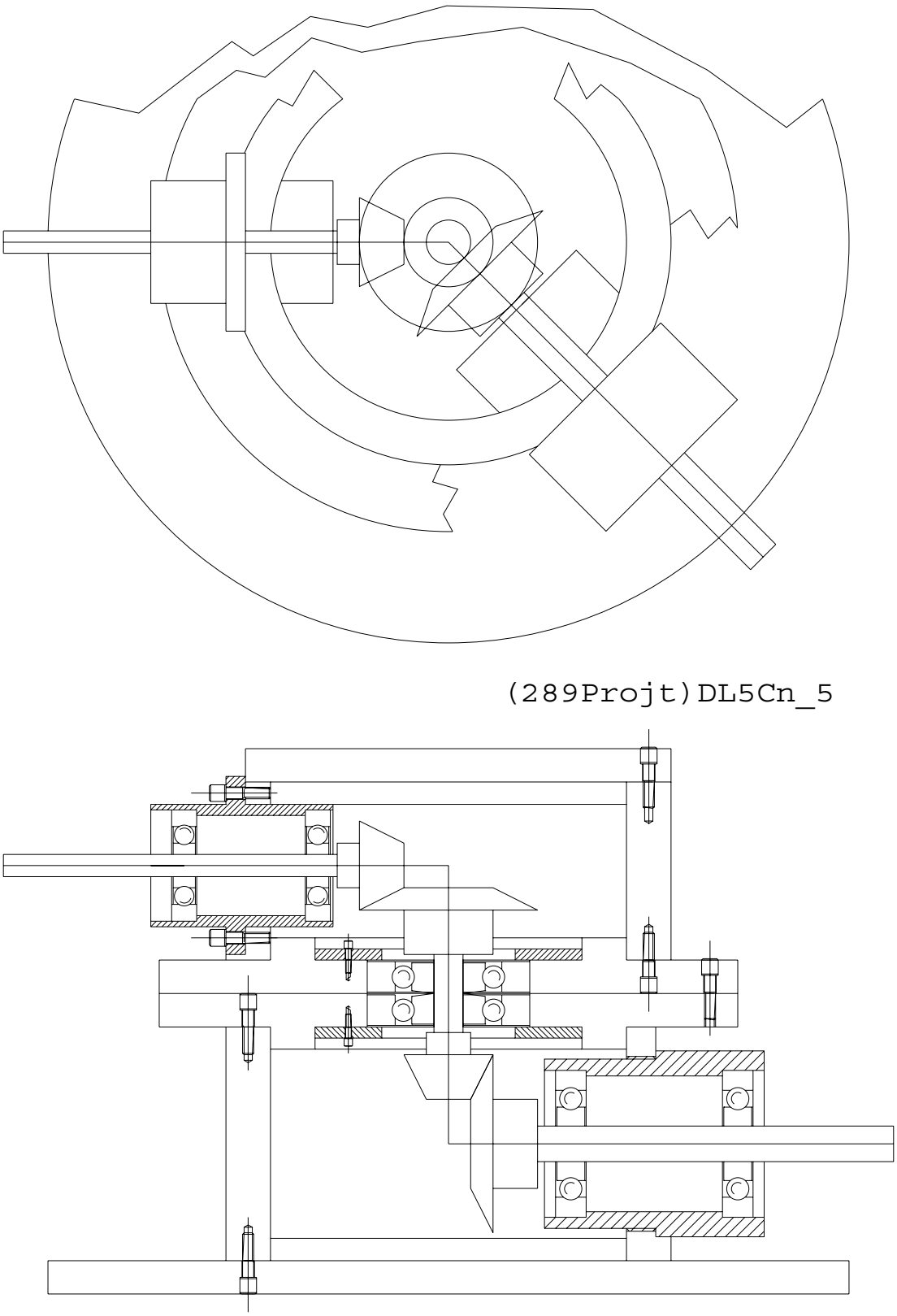

Figure 6: Input and Output Support Bearing Assemblies and Fastener Scheme Suggestions Now Complete

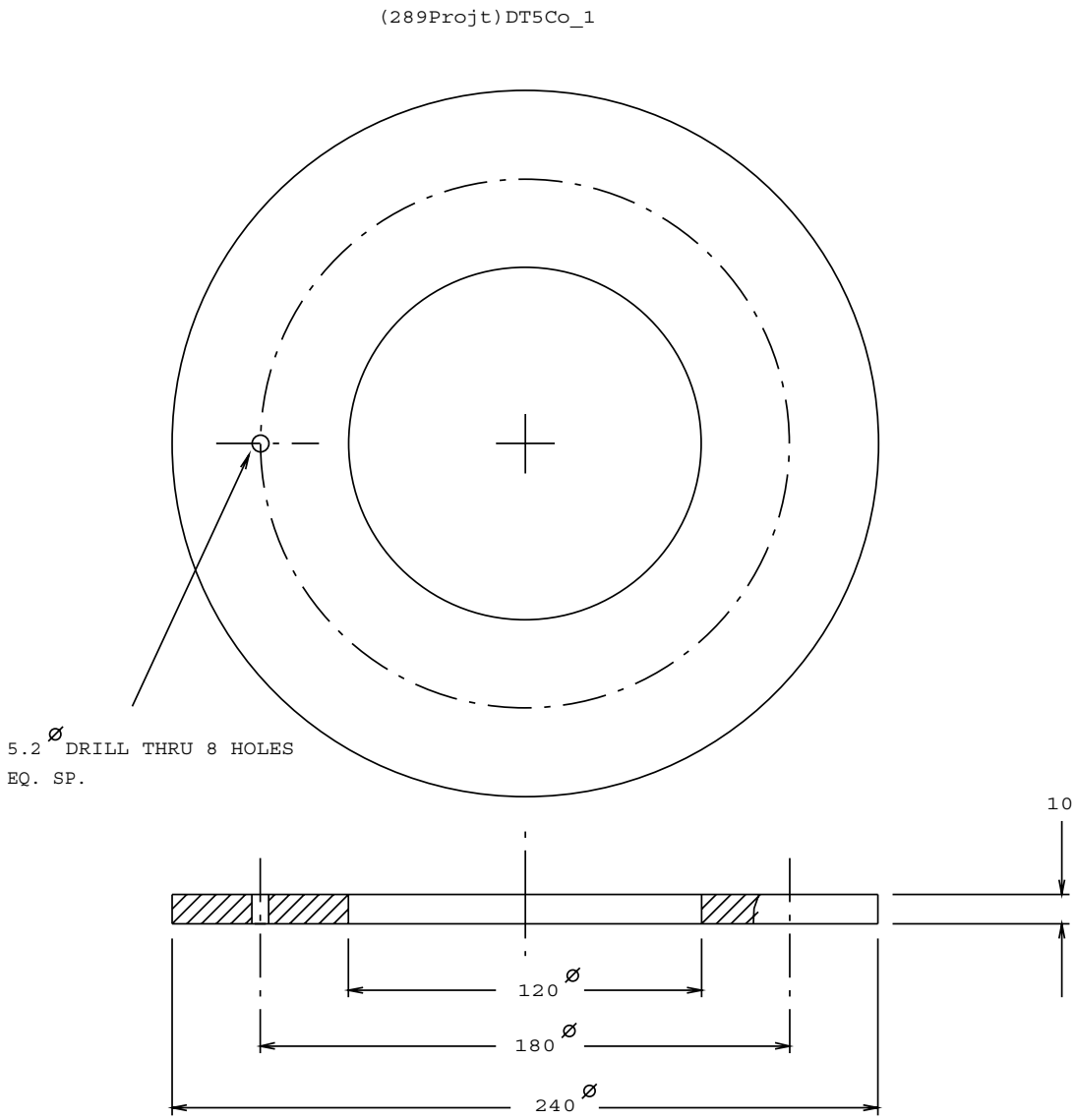

Figure 7: Incomplete Detail of Intermediate Shaft Bearing Retaining Plate

No.	Qty.	Description
01		
02		
03		
04	12	M10x40LGx25THD Allen screw
05		

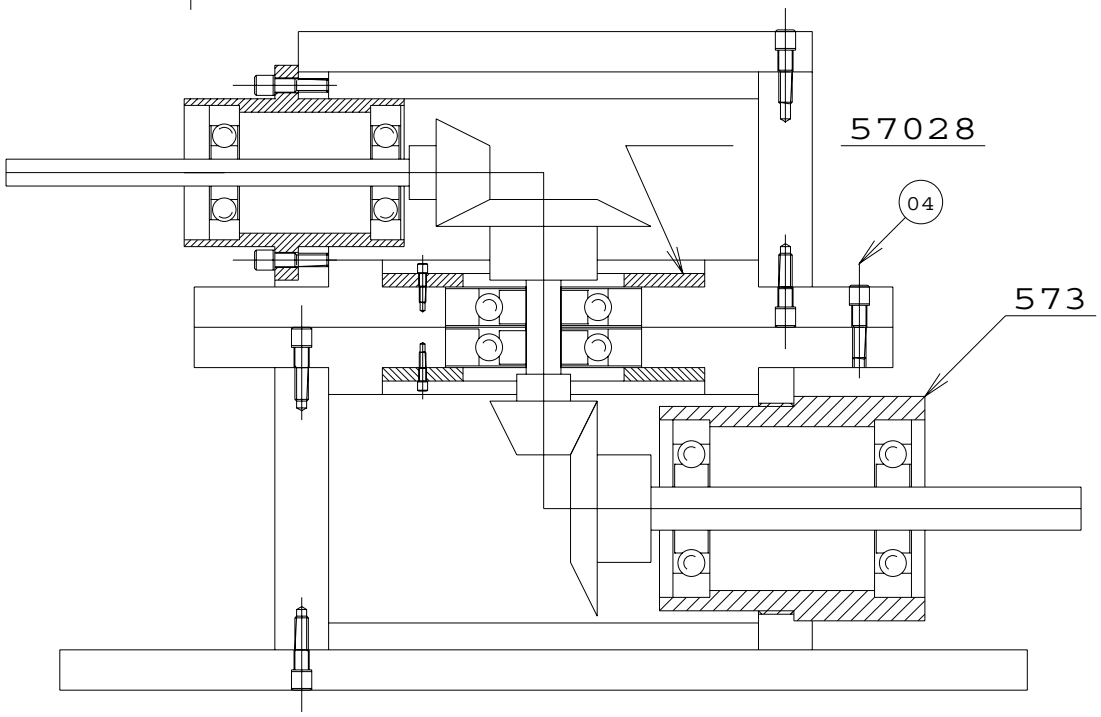

(289Projt)GAD5Cs

DWG 57

Figure 8: Working Drawing Conventions and Annotations