# Multivariable Control of a Paper Coloring Process: a Case Study

Ammar Haurani, Othman Taha*, Hannah Michalska, Benoit Boulet
McGill Centre for Intelligent Machines
McGill University
3480 University Street, Montréal, Québec, Canada H3A 2A7

*Nexfor Technology
240 Hymus Blvd.
Pointe-Claire(Quebec) Canada H9R 1G5

**Key Words :** Industrial Multivariable Control, $H_\infty$ Robust Control

## Abstract

Multivariable control of an industrial paper coloring process is studied with the aim of assessing the robustness of the resulting closed loop system, as well as the practicality of control implementation. With regard to this objective, two approaches were investigated : $H_\infty$ robust control, and PI control with decoupling. The closed-loop properties of the resulting systems are compared by simulations. Both approaches have comparable robustness with respect to uncertainty in process parameters. However $H_\infty$ control shows better properties with respect to the unmeasured disturbances in the form of added recycled paper.

This paper provides an improved controller design over the previously proposed gain scheduling approach. Our single $H_\infty$ controller provides good performance over a wide range of operating points without the necessity of renewed process identification at each setpoint.

## 1 - Introduction

Despite the importance of the control of the coloring process for paper industry, it is still often achieved in an open loop configuration where it is up to a paper machine operator to maintain manually a uniform target shade. Since such manual operation is based on trial and error, the input settings need to be frequently changed a few times before obtaining the desired color in steady state. The color process is relatively slow (a typical response time is 15 minutes), thus manual operation can entail production time losses in excess of an hour at startup or at each setpoint change. The latter also translates into losses in paper and dyes as typical production rate is expressed in tons of colored paper per hour. Additionally, the open loop process

is very sensitive to disturbances which may be present in the form of added recycled paper and uncertainties such as nonlinearity in the actuators. The development of high quality automated measurement and control systems for the coloring process is hence well motivated.

The coloring process, being inherently nonlinear, requires a careful selection of a mathematical model , prior to any control design. One approach to modeling, already exploited by industry, is to linearise the original nonlinear equations around selected operating points. A set of first-order linear models with time delays typically results (see Bond 1988, Leiviska 1999, and Wang 1997), and often proves sufficiently accurate for control purposes.

The overall control objective for the paper coloring process is to maintain an exact and uniform paper color shade in spite of disturbances acting on the system as well as modeling uncertainty.

Previous attempts to control the process include: gain scheduling, predictor model control, and Dahlin control (Bond 1988). An apparent drawback of these existing approaches is their sensitivity to disturbances and plant uncertainties. Attainability of control objectives is pre-conditioned by a highly accurate identification of the plant. Adaptive parameter identification schemes were also attempted, but resulted in a poorer performance than their non-adaptive counterparts (Bond 1988).

To avoid accurate and expensive identification of the plant while still achieving good performance for a wide range of setpoints, not-yet-explored robust control approaches to color control are adopted and investigated in this paper. The control design is carried out using a single linearised model encompassing all the operating points of interest. Two feedback control schemes are employed and

compared : robust $H_\infty$ control, and proportional-integral (PI) control with prior decoupling.

The contributions of this paper can be summarized as follows :

· The properties and advantages of robust $H_\infty$ control are explored with application to an industrial paper coloring process.

· The simulation results are shown to have remarkable performance robustness with respect to large variations in process parameters.

· The $H_\infty$ controller is shown to have superior disturbance rejection properties over decoupled PI control (a typical classical process approach).

· The single robust $H_\infty$ controller is shown to provide adequate control over a wide range of setpoints, alleviating the need to resort to gain scheduling and thus costly system identification used in previous schemes (Bond 1988).

## 2 - Process and Disturbance Model

The paper coloring process uses three color dyes. Desired paper color shade is obtained as a mixture of the three basic dye concentrations *[ounces of dye/ton of fiber]*, which are used as inputs to the process and are denoted by *u1*, *u2*, and *u3*. The basic dyes are black, and two other dyes chosen from the set of yellow, blue, and red. The basic dye concentrations are initially injected in the so-called "wet-end process" which can be modeled as a first order low- pass filter with a transport delay. The three wet basic dye concentrations are then mixed to produce a desired shade of a given color which is measured by a Xenon-based spectrophotometer as the reflectance spectrum data vector, denoted by $V = [X\ Y\ Z]^T$ , where $X$, $Y$ and $Z$ are normalized by their maximum values according to the CIELAB standard. The model of the coloring process is hence captured by the transfer function matrix :

$\mathbf{G}(s) : \ U(s) \rightarrow \Delta V(s)$ ,

$$\mathbf{G}(s) = \mathbf{K}\begin{bmatrix} \frac{e^{-\theta_1 s}}{\tau_1 s+1} & 0 & 0 \\ 0 & \frac{e^{-\theta_2 s}}{\tau_2 s+1} & 0 \\ 0 & 0 & \frac{e^{-\theta_3 s}}{\tau_3 s+1} \end{bmatrix} \qquad (1)$$

where : **K** represents a 3x3 matrix of DC gains, $\theta_i$'s are the plant delays in *[min]*, $\tau_i$'s are the time constants in *[min]*, $U = [u1\ u2\ u3]^T$ is the vector of inputs in *[oz of dye/ton of fiber]*, $\Delta V = V - V_0$, with $V_0$ being a constant initial value for $V$ giving the initial reflectances of the undyed paper measured by the sensor.

It is to be pointed out that we use ratio control (ounces of dye per ton of fiber) rather than flow control because it causes the paper color to be less sensitive to changes in undyed fiber flow rate due to changes in basis weight or paper breaks.

The measured reflectance spectrum data vector $V=[X,Y,Z]^T$, is output by the spectrometer in the form of "color space values" $L^*$, $a^*$ and $b^*$, (called the CIELAB coordinates) calculated using the following nonlinear transformations:

$$L^* = 116Y^{1/3} - 16 \qquad (2)$$

$$a^* = 500(X^{1/3} - Y^{1/3}) \qquad (3)$$

$$b^* = 200(Y^{1/3} - Z^{1/3}) \qquad (4)$$

The CIELAB coordinates are familiar to the process operators and end-users and are the color process output variables to be controlled.

The actual values of the plant parameters vary with every coloring machine. The model used in this paper is based on data provided by Nexfor Technology Canada. We take the transfer functions of the three wet-end processes to be identical in the nominal case (see Equation *(1)*). This is the case when the three dyes are of the same type (acid-type or base-type) with similar fixing dynamics or when the dyes fix to the pulp fibers so rapidly that the dye dynamics are the same as that of the pulp. The color literature consistently makes this assumption (see Bond 1988).

The nominal values of the plant delays $\theta_i$'s and the time constants $\tau_i$'s were determined from an open-loop step response of a coloring machine at Nexfor and are :

$$\theta_i = 2 \ [min], \qquad \tau_i = 2.5 \ [min] \qquad i=1,2,3 \qquad (5)$$

The DC gain matrix **K**, which depends on the selected combination of the 3 basic dyes can be determined either by identification using step responses or analytically using the reflectances of the added dyes. Our computation of **K** uses the second approach.

The values of the gain matrix **K** for the three different combinations of basic dyes are given below :

Table 1. Dye combinations and corresponding **K** matrices.

| Black,Yellow, Blue | Black,Yellow Red | Black,Blue, Red |
|---|---|---|

| $\mathbf{K_1} =$ | $\mathbf{K_2} =$ | $\mathbf{K_3} =$ |
|---|---|---|
| $\begin{bmatrix} -0.46 & -0.11 & -0.36 \\ -0.46 & -0.04 & -0.26 \\ -0.45 & -0.53 & 0.02 \end{bmatrix}$ | $\begin{bmatrix} -0.46 & -0.11 & -0.28 \\ -0.46 & -0.04 & -0.53 \\ -0.45 & -0.53 & -0.37 \end{bmatrix}$ | $\begin{bmatrix} -0.46 & -0.36 & -0.28 \\ -0.46 & -0.26 & -0.53 \\ -0.45 & 0.02 & -0.37 \end{bmatrix}$ |

Disturbances are present in the form of added recycled paper at the plant input (load disturbances).

## 3 - Process Analysis

The plant model, as expressed in equations *(1)-(4)* is nonlinear due to the sensor transformations *(2)-(4)*. However, this transformation is invertible, and the equations *(2)-(4)* are not subject to any uncertainty (the transformations are computed by the sensor on-line). Hence, the control design process can be carried out with reference to the linear part of the model *(1)* only. The latter requires the use of an algebraic pre-compensator which restores the color coordinate vector $V$ from the measured CIELAB coordinates according to the inverse of transformation *(2)-(4)*. The initial value $V_0$ of the output vector $V$ can be recovered similarly.

As part of our control design procedure, we investigated the optimal selection of the basic dye combination, which according to the CIELAB standard provides the largest space of feasible colors. The dye efficiency index $E$ introduced by Chao & Wickstrom (see Bond 1988) is employed for this purpose :

$$E = \frac{|\det(\mathbf{K})|}{\prod_{j=1}^{3}\sqrt{\sum_{i=1}^{3} k_{ij}^2}} \in [0,1] \qquad (6)$$

where $k_{ij}$ is the *ijth* element of matrix **K.** Higher values of $E$ yield larger spaces of reachable colors. The three different combinations of basic dyes result in the following efficiency index values :

Table 2. Dye combinations and corresponding efficiency index $E$

| Black,Yellow, Blue | Black,Yellow, Red | Black,Blue, Red |
|---|---|---|
| $\mathbf{K}_1$ | $\mathbf{K}_2$ | $\mathbf{K}_3$ |
| $E_1 = 0.1790$ | $E_2 = 0.1735$ | $E_3 = 0.1566$ |

Since we are not targeting any specific output color shade, we choose the optimal DC gain matrix as the one which corresponds to the largest value of index $E$. Thus $\mathbf{K}_1$ will be used in further analysis.

It needs also to be pointed out that the inputs *u1*, *u2*, *u3* and the outputs $X$, $Y$ and $Z$ are dimensionless because of normalization by their corresponding maximal values.

In the following sections we apply $H_\infty$ robust control design and decoupled PI control to the process modeled above.

## 4 - $H_\infty$ Robust Control

In this section we present the design of an $H_\infty$ controller for the process whose transfer function is presented in Equation *(1)*, with nominal values of parameters $\theta$ and $\tau$ as given in *(5)* and matrix **K** as $\mathbf{K}_1$ in Table 2. The disturbances are introduced at the plant input (load disturbances).

It is well known that the objective of robust control is to design a controller which guarantees stability and good performance in the presence of uncertainties. Uncertainties may arise from unmodeled dynamics (nonlinear or linear), in which case they are represented as unstructured uncertainties. On the other hand, perturbations in the process parameters can be represented by structured uncertainties. For the coloring process, we use structured parametric uncertainties and cover their effects by introducing multiplicative input uncertainty. An output performance weighting function is also added to meet the performance specifications on the output step response (see **Figure 1** below).

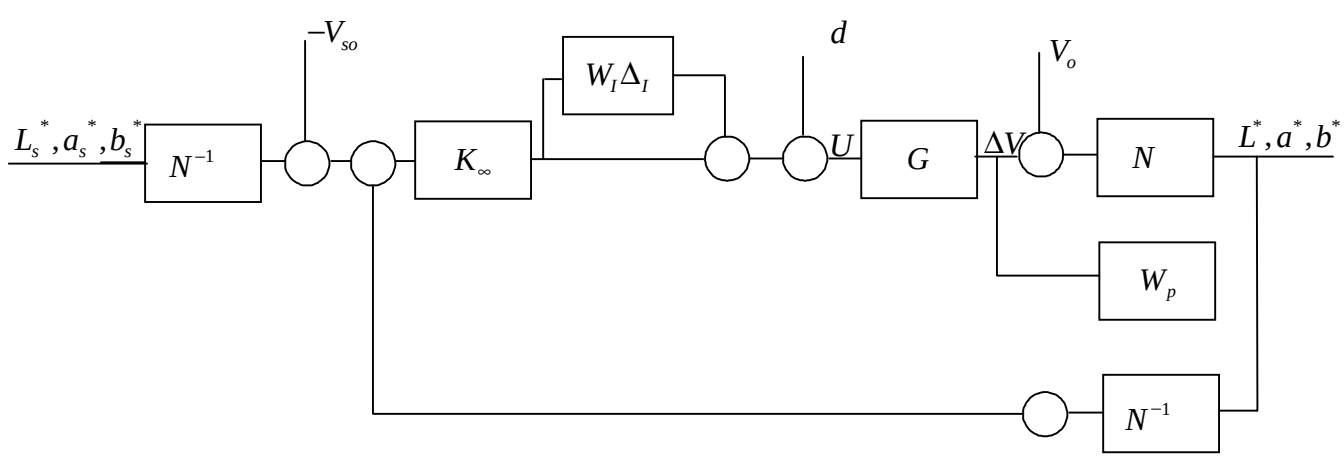

$-V_o$

**Figure 1.** Block diagram of closed-loop system with $H_\infty$ controller
Where : $N$ is the nonlinear transformation given by Equations *(2)-(4)*.
$d$ is the input disturbance.

Parametric uncertainties are assumed to be present in the gain matrix **K** , plant delay $\theta$ , and time constant $\tau$. Concerning the uncertainties in matrix **K**, it is assumed that the perturbations are the same for the entries of each column. This corresponds to the uncertainty in every one of the three wet-end processes into which each of the three dyes is injected. The uncertainties in the parameters are given in terms of multiplicative perturbations as follows :

$$K_j^{\,p} = K_j(1+\delta_j^{\,K})$$

*(7)*

$$\theta_j^{\,p} = \theta_j(1+\delta_j^{\,\theta}) \qquad j=1,2,3$$

*(8)*

$$\tau_j^{\,p} = \tau_j(1+\delta_j^{\,\tau}) \qquad (9)$$

where $|\delta_j^{\,K}| \le \ell^K$ *(10)*

$|\delta_j^{\,\theta}| \le \ell^\theta$ *j=1,2,3*

*(11)*

$|\delta_j^{\,\tau}| \le \ell^\tau$

*(12)*

In the above $K_j^{\,p}$ is the *j-th* column of the perturbed DC gain matrix $\mathbf{K}^p$ and $K_j$ is the *j-th* column of the nominal matrix **K** , and $\ell^K = 0.25$, $\ell^\theta = 0.40$ and $\ell^\tau = 0.20$ .

The effect of the uncertainties in *(7)-(9)* is covered by structured multiplicative input uncertainties (see Laughlin 1987). This results in the following choice of weighting functions for the $H_\infty$ problem :

$$W_{I_j} = \frac{\| K_j(1+\ell^K) \|}{\| K_j \|} \frac{\tau_j s+1}{(1-\ell^\tau)\tau_j s+1} e^{-2\ell^\theta s} - 1 \qquad (13)$$

Substituting numerical values for the parameters we obtain:

$$W_{I_j} = 1.25 \frac{2.5s+1}{2s+1} e^{-0.8s} - 1 \qquad j=1,2,3 \qquad (14)$$

$$\mathbf{W}_I = diag\{W_{I_j}\} \qquad j=1,2,3$$

*(15)*

The following performance specifications were adopted and refer to the output step response :

- Settling time : *20 min*
- Steady state error : *2%*
- Overshoot : *15%*

Performance weights of the following form were adopted (see Zhou 1998) :

$$W_p = c\frac{s+a}{s+b}$$

*(16)*

where the pole -*b* is chosen close to zero to ensure a small steady-state and low frequency error. The purpose of this performance weight is to keep the sensitivity function *S* of the system small at low frequencies. In terms of the output sensitivity function S :

$$\| W_p S \|_\infty < 1 \Rightarrow \| S(j\omega) \| < \| W_p(j\omega) \|, \forall \omega \qquad (17)$$

The weight parameters *a,b,c* were adjusted by μ-synthesis using DK-iteration until an acceptable robustness/performance trade-off could be obtained. This resulted in the following:

$$W_{p_1} = 15\frac{s+8}{s+0.0005}$$

*(18)*

$$W_{p_2} = 10\frac{s+7}{s+0.0005}$$

*(19)*

$$W_{p_3} = 10\frac{s+15}{s+0.0005}$$

*(20)*

with $\mathbf{W}_p = diag\{W_{p_j}\}$ *j=1,2,3*

*(21)*

The above design procedure resulted in a three-input, three-output, 24th-order compensator meeting the performance specifications for all the admissible perturbed plant models (see Figures 2,3 and 4 ). In the simulations, negative steps were taken to have reachable colors and white noise signal was used for input disturbance *d*.

Figure 2 shows the response of the system for the nominal parameters.

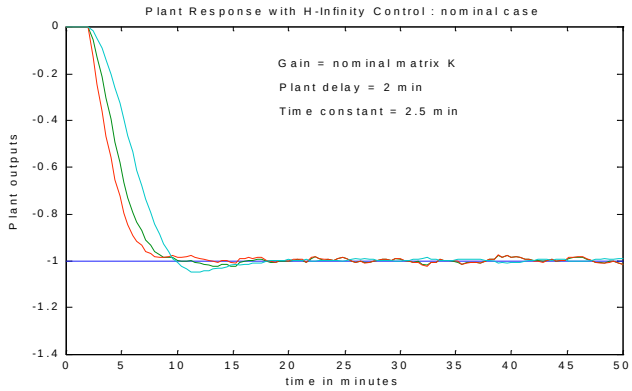


**Figure 2**

Figure 3 shows the response of the system for the following perturbed parameters : $\mathbf{K}^p = 1.25\,\mathbf{K}$ , $\theta_j^p = 0.6\theta = 1.2$ *[ min]* and $\tau_j^p = 0.8\tau = 2$ *[ min]* , *j=1,2,3.*

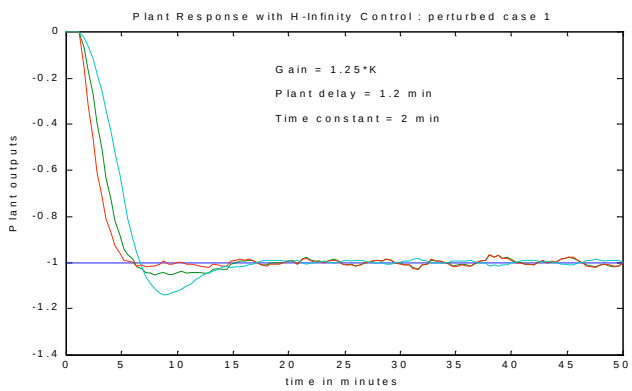


**Figure 3**

Figure 4 shows the response of the system for the following perturbed parameters : $\mathbf{K}^p = 0.75\,\mathbf{K}$ , $\theta_j^p = 1.4\theta = 2.8$ *[ min]* and $\tau_j^p = 1.2\tau = 3$ *[ min]* , *j=1,2,3.*

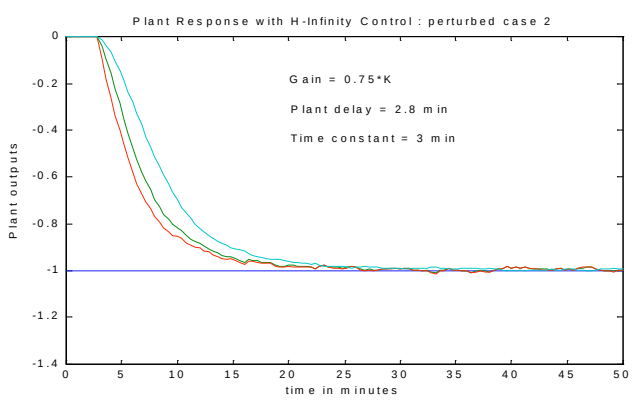


**Figure 4**

## 5 - PI Control with Decoupling

Conventional PI control is widely used in the pulp and paper industry for its simplicity and ease of operation. On the other hand, multivariable control still finds only limited application as it is perceived by the process engineers and operators to be difficult to implement and commission.

For this reason, it is of interest to compare the above $H_\infty$ robust control technique to decoupled PI control. The decoupling is carried out by inverting the DC gain matrix **K**. In this context, the relative gain array **RGA(K)** , the singular values $\sigma_i$ (**K**), *i=1,2,3* and the condition number Cond(**K**) of the process DC gain matrix **K** , are of special importance as they are an indication of the sensitivity of $\mathbf{K}^{-1}$ to perturbations in the entries of **K** . These values are computed as follows :

$$\sigma_1 = 0.9522 \quad , \quad \sigma_2 = 0.456 \quad , \quad \sigma_3 = 0.0787 \qquad (22)$$

$$\text{Cond}(\mathbf{K}) = \sigma_1 / \sigma_3 = 12.1038 \qquad (23)$$

$$\mathbf{RGA}(\mathbf{K}) = \begin{bmatrix} -1.8334 & 0.3960 & 2.4374 \\ 2.6415 & -0.1874 & -1.4541 \\ 0.1919 & 0.7913 & 0.0167 \end{bmatrix} \qquad (24)$$

Since the inputs and outputs are scaled by their maximum values, the above are qualified as “small” if they do not exceed three, and as “large” if they exceed 10 (see Skogestad and Postlethwaite 1996).

Although the condition number is qualified as large, the **RGA** provides a better indication of the sensitivity of matrix $\mathbf{K}^{-1}$ to uncertainties. This is motivated by the following. Let $\lambda_{ij}$ be the *ij-th* entry of **RGA(K)** . Then, matrix **K** becomes singular if its *ij-th* entry is changed from $k_{ij}$ to $k_{ij}(1-1/\lambda_{ij})$. As the entries of **RGA(K)** are all small, the matrix **K** can be inverted robustly.

Inversion of **K** yields three uncoupled and identical SISO loops which are easily controlled with simple PI controllers, $C_i(s)$ :

$$C_i(s) = 2\frac{s+0.4}{s} \quad , i = 1\ldots3 \qquad (25)$$

The chosen PI controllers provided for the best trade-off between overshoot and input noise rejection properties. Further increase in the PI gain towards improved noise rejection properties resulted in undesirable undamped responses.

Setpoints are still given in terms of the controlled outputs *L*, a*, b** , where the nonlinearity is eliminated by inversion of *(2)-(4)* (see block diagram in **Figure 5** below).

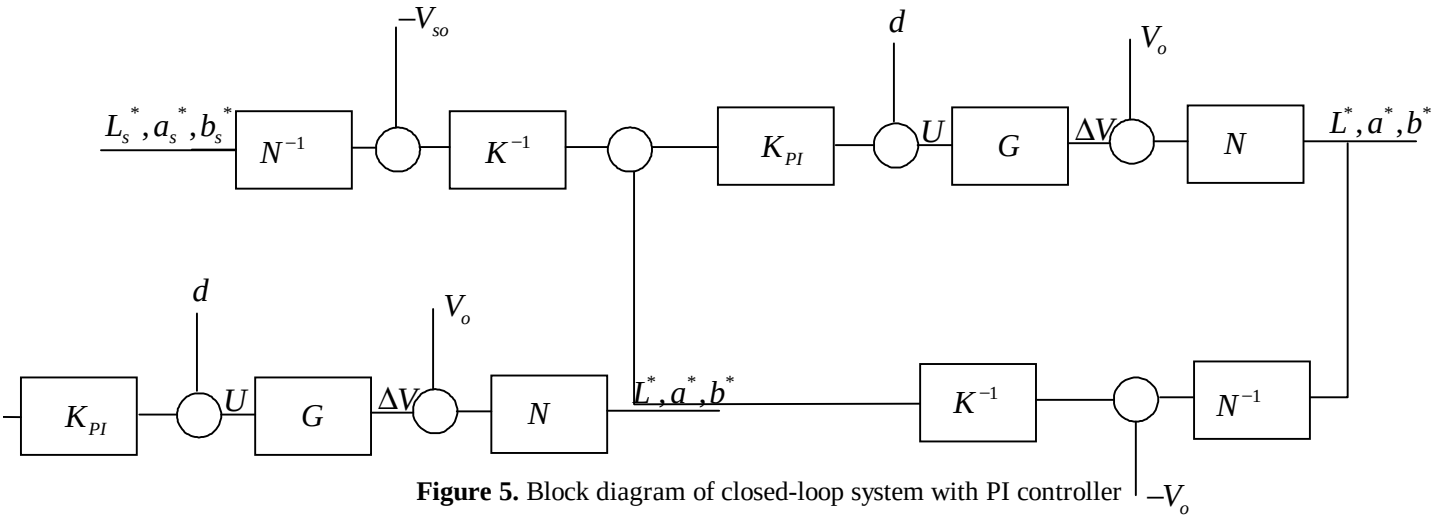


**Figure 5.** Block diagram of closed-loop system with PI controller

Where : $N$ is the nonlinear transformation given by Equations *(2)-(4)*.

$d$ is the input disturbance.

Responses of the nominal process model to simultaneous step inputs in $L^*$, $a^*$ and $b^*$ are shown in Figure 6.

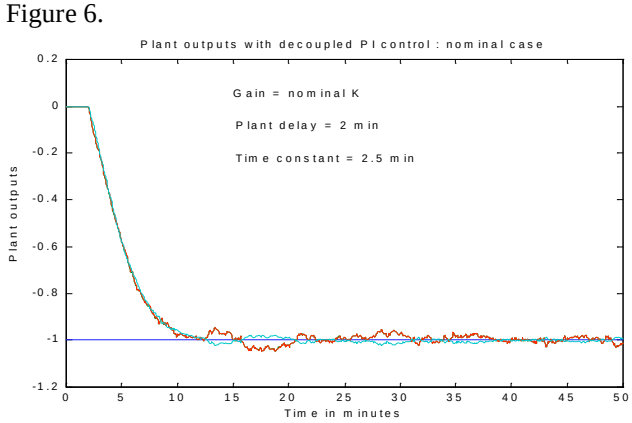


**Figure 6**

In order to establish a fair comparison of the robustness properties of the constructed $H_\infty$ and PI controllers, the same perturbed parameters and exogenous disturbances are used in both simulations. The resulting step responses for the PI controller are shown in Figures 7 and 8 and can be directly compared with those of Figures 3 and 4.

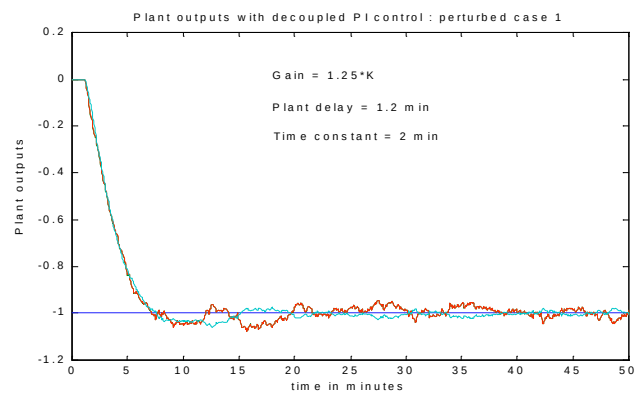


**Figure7**

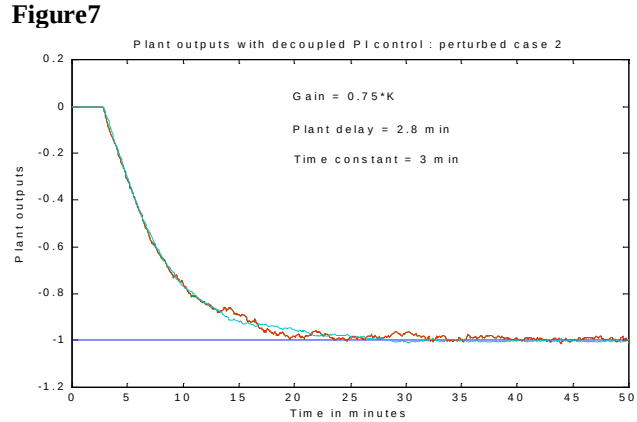


**Figure 8**

## 6 – Design conclusions

The following observations were made by comparing the simulation results for both control designs ($H_\infty$ robust control and PI control with decoupling) :

· Both controllers meet the step response specifications on the transients (overshoot and rise-time) for the nominal, as well as the perturbed models.

· The $H_\infty$ controller exhibits better input disturbance rejection than the PI controller at the cost of a larger overshoot in one of the outputs.

The most important objective in the paper coloring process is to maintain accurate and uniform paper color shades despite the load disturbance in the form of added recycled paper.

Therefore the $H_\infty$ controller seems to be the best choice due to its good disturbance rejection properties and its ability to compensate for process-model errors.

It should however be pointed out that the choice of the $H_\infty$ controller over the classical PI one entails an increased design and commission cost due to its higher complexity and order.

Furthermore, for other combinations of colors, the **RGA**(**K**) might contain large entries implying ill-conditioning of the DC gain matrix **K** and thus hindering robust decoupling required in the PI approach.

This is yet another reason for which the $H_\infty$ controller should be preferred, since by design it is robust with respect to uncertainties in the **K** matrix.

## References


[1] - Anderson K. A. ; Smart Automation of an On-Line Color Measurement and Control System. Chicago, Illinois, April 26-28, page 401-418, (1995)

[2] - Bond T. ; Control of Color in Dyed Paper. Thesis submitted for a Master's Degree at the University of British Columbia. April (1988)

[3] - Laughlin, D. L.,Rivera, D. E. and Morari, M. Smith predictor design for robust performance, International Journal of Control 46(2) : 477-504 (1987)

[4] - Leiviska K. ; Process Control. Papermaking Science and Technology. Book 14. Published in cooperation with the Finish Paper Engineers' Association and TAPPI. (1999)

[5] - Skogestad S. and Postlethwaite I. ; Multivariable Feedback Control, Analysis and Design. John Wiley & Sons (1996)

[6] - Wang H., Wang A. P. and Duncan Stephen ; Advanced Process Control in Paper and Board Making. Pira Technology Series, (1997)

[7] - Zhou K. ; Essentials of Robust Control. Prentice Hall (1998)