Model and Controller Reduction for Flexible Aircraft Preserving Robust Performance

Nabil Aouf, Benoit Boulet
McGill Centre for Intelligent Machines
McGill University
3480 University Street, Montréal, Québec, Canada H3A 2A7

Ruxandra Botez
Département de génie de la production automatisée
Ecole de technologie supérieure
1100 Notre-Dame Street West, Montréal, Québec, Canada H3C 1K3

Abstract
This paper presents a systematic model/controller order reduction method applied to flexible aircraft. The method, based on mixed μ-synthesis, determines which flexible modes can be truncated from the full-order model of the aircraft and finds a corresponding reduced-order controller preserving robust closed-loop performance. This method is of interest for practical model and controller reduction for flexible aircraft because in this context it is important to keep the physical interpretation of the truncated and remaining modes. A numerical example is worked out for a flexible model of a B-52 bomber.

I- Introduction

This paper presents a systematic approach to reduce the order of a model-controller pair for a flexible aircraft. The importance of the controller order reduction problem has motivated researchers to seek solutions that would facilitate the control design procedure, which can be difficult if the model order is high. A reduced-order controller also entails a lower computational cost in a real-time implementation. Typically, a reduction is performed on the model and then a controller is designed for the reduced-order model. Alternatively, a reduced-order controller can be directly designed based on the full-order model.

The majority of order reduction methods developed so far for linear time-invariant continuous-time systems are carried out in open loop and do not take into account closed-loop stability and performance. The methods of cost analysis [11], balanced reduction [9], and optimal Hankel-norm approximation [4] are some of the most popular in the literature. Some progress was achieved by Enns [3] in his introduction of weighting functions into the classical balanced reduction technique in order to preserve closed-loop stability. Anderson and Liu [1] extended this method to find weighting functions for the controller reduction problem that can maintain closed-loop performance.

The newer reduction methods guarantee the preservation of closed-loop stability and performance, especially for controller reduction techniques. Goddard and Glover [5] developed sufficient conditions to design a stabilizing reduced-order controller achieving a preserved level of performance. This work was based on the following idea: Given a full-order controller K_f achieving the performance level γ and selecting $\gamma_1 > \gamma$, weighting functions W_1, W_2 are derived such that $\left\| W_2^{-1}(K_r - K_f)W_1^{-1} \right\|_\infty < 1 \Rightarrow \left\| \mathcal{F}_L(P, K_r) \right\|_\infty < \gamma_1$, where K_r and K_f are, respectively, the reduced-order and full-order controllers, P is the nominal full-order generalized plant model, and $\mathcal{F}_L(P, K_r) := P_{11} + P_{12}\left(I - K_r P_{22}\right)^{-1} K_r P_{21}$ is the lower linear fractional transformation whose $\mathcal{H}_\infty$-norm should be kept small.

All of the above-mentioned order reduction methods do not take into account the physical interpretation of the truncated states. An optimal reduced-order model (or controller) may achieve the best level of performance in closed loop, but may only provide limited insight to a structure engineer if the state vector has no physical meaning. Our proposed reduction method, inspired from the work of Kavranoglu [6], involves modal truncation of the model to a reduced number of flexible modes, and produces an associated reduced-order controller satisfying a robust performance specification.

Previous research on modal truncation includes the work of Madelaine and Alazard [7] which proposes a model reduction technique based on a frequency-domain heuristic related to the displacement of the effect of the flexible modes in closed loop. In our approach, the main reduction criterion is the achievable robust performance level.
We use the novel idea that real parametric uncertainty in the flexible modes selected for truncation in the full-order model can also represent the effect of the truncation of these modes. It is desired to truncate k flexible modes. As a first step, our procedure lists all combinations of k flexible modes from the n flexible modes of the nominal model. This list is reduced by checking specific criteria of robust stability and performance that have to be met. For each candidate combination α of flexible modes to be truncated

in the list, a full-order controller $K_{f\alpha}(s)$ is designed and kept in the set $\mathcal{K}_F$ if it achieves the desired robust performance level. Robust performance is measured using the structured singular value with respect to the parametric uncertainty covering the uncertainty in the flexible mode parameters and the truncation of these flexible modes.
Since the first step in our approach calls for the design of $\binom{N}{k} = \frac{N!}{k!(N-k)!}$ full-order controllers, it is limited to aircraft models with up to around 15 flexible modes, depending on computing power and time available for design. Nowadays, it is not unreasonable to assume that a few days of intense computations would represent a relatively small cost in the overall design of a new commercial aircraft with flexibilities. What is most important is to guarantee robust performance with a reduced-order controller.

The second step of our procedure consists of generating a reduced-order controller for the best full-order controller $\hat{K}_f \in \mathcal{K}_F$ corresponding to mode combination $\hat{\alpha}$. The problem is set up as a minimization of the weighted error norm between the nominal closed-loop matrix and the reduced one, and its solution yields robust performance preservation with the reduced controller. Preservation of robust performance of the reduced model/controller pair is obtained from a μ setup, and controller reduction is thus viewed as a robustness problem against uncertainty in the controller. Any controller reduction technique may be used, as long as the resulting K_r is close enough to $\hat{K}_f$ in $\mathcal{L}_\infty$ to ensure that robust performance is preserved with the reduced-order controller. We treat both model and controller reduction through the same two-step procedure to obtain a good pair of reduced-order model and controller.

II-Problem Setup

The nominal transfer matrix model of a flexible aircraft (or structure in general) can be expressed as:

$$G(s) = G_{rbm}(s) + G_f(s) \tag{1}$$

where the modal state-space realization of the flexible dynamics $G_f(s)$ is given by:

$$G_f(s) = \left[\begin{array}{c|c} A_0 & B_0 \\ \hline C_0 & D_0 \end{array}\right] := C_0(sI - A_0)^{-1}B_0 + D_0, \tag{2}$$

where $A_0 \in \mathbb{R}^{2N\times 2N}$ is in modal form, i.e., $A_0 = \mathrm{diag}\{A_i\}$, $A_i = \begin{pmatrix} -\zeta_i\omega_i & \sqrt{1-\zeta_i^2}\omega_i \\ -\sqrt{1-\zeta_i^2}\omega_i & -\zeta_i\omega_i \end{pmatrix}$ $i = 1,\ldots,N$, and N is the number of flexible modes of our model; ζ_i, ω_i are the damping ratio and the undamped natural frequency of the ith mode; $B_0 \in \mathbb{R}^{2N\times m}, C_0 \in \mathbb{R}^{p\times 2N}, D_0 \in \mathbb{R}^{p\times m}$. $G_{rbm}(s)$ is the rigid-body transfer matrix. Truncation of the ith flexible mode from the nominal model can be seen as eliminating the effect of this mode. Because there is no interaction between the modal states in the modal realization of $G_f(s)$, this truncation corresponds to setting to zero the 2×2 matrix A_i and the corresponding rows and columns of matrices B_0 and C_0, respectively.

III-Uncertainty Model

Parametric uncertainty may be less conservative than other types of uncertainty and may lead to a more realistic representation, especially parametric uncertainty in the truncated modes. In our approach, we treat both this kind of uncertainty and the truncation of the corresponding modes through the same setup, and with the use of a single repeated real scalar perturbation. Robust performance is optimized against this uncertainty which allows us to design full-order controllers K_f achieving robust performance.

For a fixed number of flexible modes to be truncated k, we define the set of all possible combinations of k flexible modes to be truncated as follows:

$$\mathcal{A}_k := \left\{\alpha = [\alpha_1 \cdots \alpha_N] : \alpha_i \in \{0,1\}, \sum_{i=1}^{N}\alpha_i = k\right\}, \tag{3}$$

where $\alpha_i = 1$ to truncate and $\alpha_i = 0$ to keep the ith mode. For each combination, we define corresponding perturbations of the modal state-space matrices representing modal parameter uncertainty and the truncation effect of these specific modes. First, let $T := diag\{\alpha_1 I_2, \ldots, \alpha_N I_2\}$. The perturbed plant model is then defined as follows:

$$G_p(s) := G_{rbm}(s) + G_{fp}(s), \tag{4}$$

$$G_{fp}(s) := \left[\begin{array}{c|c} A_0 + \Delta_A(\alpha) & B_0 + \Delta_B(\alpha) \\ \hline C_0 + \Delta_C(\alpha) & D_0 \end{array}\right], \tag{5}$$

where the perturbations of the state-space matrices are defined by:

$$\begin{bmatrix} \Delta_A & \Delta_B \\ \Delta_C & 0 \end{bmatrix} := \delta \begin{bmatrix} A_\alpha & B_\alpha \\ C_\alpha & 0 \end{bmatrix}, \quad \delta \in \mathbb{R}, |\delta| \le 1, \tag{6}$$

and the *truncation matrices* $A_\alpha, B_\alpha, C_\alpha$ are given by:

$$A_\alpha = TA_0,\ B_\alpha = TB_0,\ C_\alpha = C_0T\ . \tag{7}$$

The real uncertainty δ lies between –1 and 1, covering more than a single objective. The correspondence between values of the parameter δ and the objectives in our design is given as follows:

$\delta = -1$:	Truncate mode combination
$\delta = 0$:	Nominal full-order model
$\delta \in]-1,0[\cup]0,1]$:	Parametric uncertainty of the truncated modes

(8)

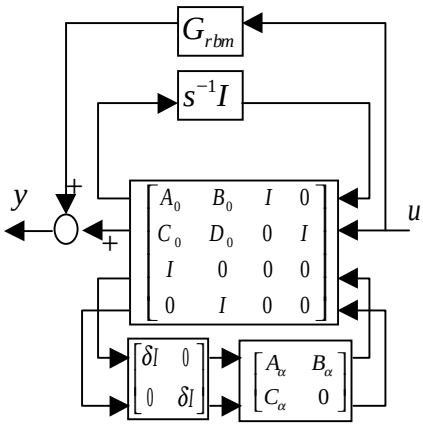

Figure 1

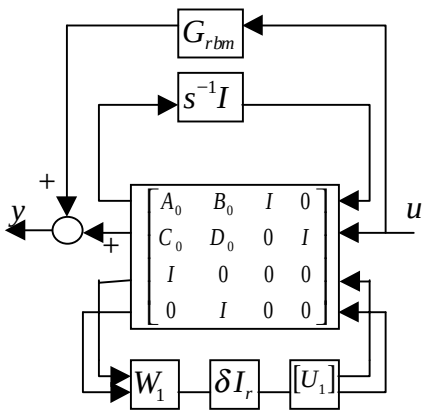

Figure 2

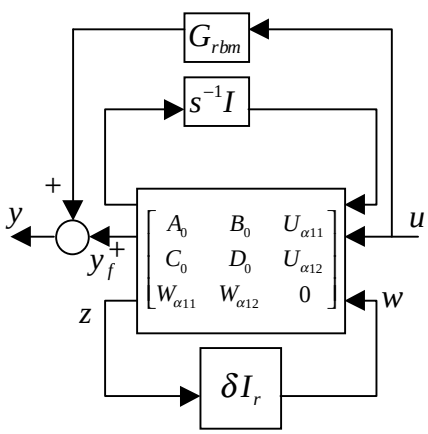

Figure 3

The truncation matrices $A_\alpha, B_\alpha, C_\alpha$ are shown on the block diagram of $G_p(s)$ in Figure 1. In fact, these matrices can be lumped in the augmented plant model. However, the multiplicity of the associated real perturbation δ is high. Using a singular value decomposition of $\begin{bmatrix} A_\alpha & B_\alpha \\ C_\alpha & 0 \end{bmatrix}$, we can reduce the number of repeated perturbations δ, which leads to a less conservative uncertainty model:

$$\begin{bmatrix} A_\alpha & B_\alpha \\ C_\alpha & 0 \end{bmatrix} = U_\alpha \Sigma_\alpha V_\alpha^T = \begin{bmatrix} U_{\alpha 1} & U_{\alpha 2} \end{bmatrix} \begin{bmatrix} \Sigma_{\alpha r} & 0 \\ 0 & 0 \end{bmatrix} \begin{bmatrix} V_{\alpha 1} \\ V_{\alpha 2} \end{bmatrix} \quad (9)$$

$$= U_{\alpha 1} \Sigma_{\alpha r} V_{\alpha 1} = U_{\alpha 1} W_{\alpha 1}$$

where: $r = rank \begin{bmatrix} A_\alpha & B_\alpha \\ C_\alpha & 0 \end{bmatrix} \le \max\{2N+m, 2N+p\}$ and $W_{\alpha 1} = \Sigma_{\alpha r} V_{\alpha 1}$. Figures 2 and 3 show, respectively, how the multiplicity of δ is reduced to r and the matrices $W_{\alpha 1} = \begin{bmatrix} W_{\alpha 11} & W_{\alpha 12} \end{bmatrix}$, $U_{\alpha 1} = \begin{bmatrix} U_{\alpha 11} \\ U_{\alpha 12} \end{bmatrix}$ are incorporated in the augmented plant. The reduction in the multiplicity of δ yields a less conservative uncertainty set. From Figure 3, the transfer function between u and y is given by:

$$G_p(s) = G_{rbm}(s) + \mathcal{F}_L\left[\mathcal{F}_U(M_\alpha, s^{-1}I), \delta I_r\right], \quad (10)$$

where $M_\alpha := \begin{bmatrix} A_0 & B_0 & U_{\alpha 11} \\ C_0 & D_0 & U_{\alpha 12} \\ W_{\alpha 11} & W_{\alpha 12} & 0 \end{bmatrix}$ is the real matrix representing the generalized plant in Figure 3. Define the transfer matrix $H_\alpha(s) := \mathcal{F}_U(M_\alpha, s^{-1}I)$ such that

$$\begin{bmatrix} y_f \\ z \end{bmatrix} = H_\alpha(s) \begin{bmatrix} u \\ w \end{bmatrix}, \quad (11)$$

where u is the vector of actuator inputs, w is the output of the repeated real perturbation δI_r, y_f is the output of the flexible part of the aircraft's dynamics, and z is the input of the repeated real perturbation. Reversing the order of the inputs and outputs of $H_\alpha(s)$, we obtain the augmented plant model $Q_\alpha(s)$, as given by Figure 4, mapping $\begin{bmatrix} w \\ u \end{bmatrix}$ to $\begin{bmatrix} z \\ y_f \end{bmatrix}$. Figure 4 is close to a standard setup for μ-synthesis providing robustness against a single repeated real perturbation.

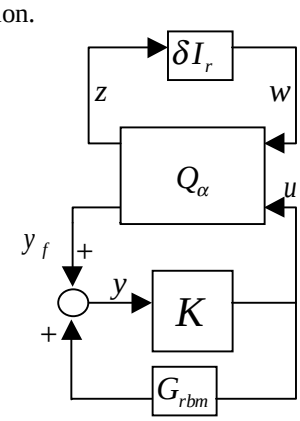

Figure 4

Exogenous inputs of interest, e.g., reference signals and disturbances, are grouped together in d, and outputs to be controlled, e.g., tracking error and control signals, are grouped in $\tilde{e}$. These signals are added to $Q_\alpha(s)$ together with the performance weighting function $W_p(s)$ such that $e(s) = W_p(s)\tilde{e}(s)$ to obtain the augmented plant model $P_\alpha(s)$ mapping $\begin{bmatrix} w^T & d^T & u^T \end{bmatrix}^T$ to $\begin{bmatrix} z^T & e^T & y^T \end{bmatrix}^T$. Note that the rigid-body part of the dynamics $G_{rbm}(s)$ is also embedded in $P_\alpha(s)$ using standard block diagram manipulations.

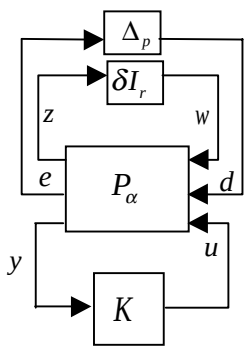

Figure 5

Figure 5 shows the $\mu-$synthesis setup for robust performance. The perturbation $\Delta_p \in \mathbb{C}^{n_d \times n_e}$ is a fictitious uncertainty included for performance, linking the exogenous inputs d to the outputs to be controlled e. The uncertainty structure is defined as follows:

$$\Gamma := \left\{ \Delta := \begin{bmatrix} \Delta_p & 0 \\ 0 & \delta I_r \end{bmatrix} : \Delta_p \in \mathbb{C}^{n_d \times n_e}, \delta \in \mathbb{R} \right\}. \tag{12}$$

and the corresponding set of stable structured perturbations is defined as

$$\mathcal{D}_\Gamma := \left\{ \Delta(s) \in \mathcal{H}_\infty : \|\Delta(s)\|_\infty < 1, \Delta(s_0) \in \Gamma, \forall \operatorname{Re}\{s_0\} > 0 \right\} \tag{13}$$

The perturbed plant model is thus given by $\mathcal{F}_U\left[P_\alpha(s), \Delta(s)\right]$, where $\Delta(s) \in \mathcal{D}_\Gamma$.

IV-Model and Controller Reduction

Mixed-μ theory can be used to design a full-order controller achieving the best robust performance index with, e.g., a DGK-iteration or a minimization of $\mu_\Gamma\left[\mathcal{F}_L\left(P_\alpha, K_{f\alpha}\right)\right]$ based on successive $\mathcal{H}_2$ designs [12]. At the end of the first step, we have the set $\mathcal{K}_F$ of full-order controllers which achieve robust performance whether or not the corresponding candidate modes have been truncated.

The second step, after the design of the full-order robust controllers, consists of finding a reduced controller K_r of desired order q for the best full-order controller $\hat{K}_f \in \mathcal{K}_F$ corresponding to combination $\hat{\alpha}$ of the candidate flexible modes to be truncated. Our method preserves robust closed-loop performance, which is not the case for most earlier works done on controller order reduction. We start with the optimization problem:

$$\inf_{\substack{K_r \\ \text{stabilizing}}} \sup_{\substack{\delta \in \mathbb{R} \\ |\delta| \le 1}} \left\| \mathcal{F}_U\left[\mathcal{F}_L(P_{\hat{\alpha}}, \hat{K}_f), \delta I_r\right] - \mathcal{F}_U\left[\mathcal{F}_L(P_{\hat{\alpha}}, K_r), \delta I_r\right] \right\|_\infty \tag{14}$$

That is, we want the perturbed closed-loop frequency responses with the full-order and reduced-order controllers to be as close as possible. A specification can be expressed with $\rho > 0$ as:

$$\left\| \mathcal{F}_U\left[\mathcal{F}_L(P_{\hat{\alpha}}, \hat{K}_f), \delta I_r\right] - \mathcal{F}_U\left[\mathcal{F}_L(P_{\hat{\alpha}}, K_r), \delta I_r\right] \right\|_\infty \le \rho . \tag{15}$$

Note that ρ should be chosen such that (15) implies robust performance with the reduced-order controller. For example, if $\sup_{\omega \in \mathbb{R}} \mu_\Gamma[\mathcal{F}_L(P_{\hat{\alpha}}, \hat{K}_f)(j\omega)] = \gamma \le 1$, then one should pick $\rho < 1 - \gamma$. The optimization problem in (14) can be represented as in Figure 6, where:

$$\begin{bmatrix} z_1 \\ e_1 \end{bmatrix} = V \begin{bmatrix} w_1 \\ d \end{bmatrix}, \quad V := \mathcal{F}_L(P_{\hat{\alpha}}, \hat{K}_f) = \begin{bmatrix} V_{11} & V_{12} \\ V_{21} & V_{22} \end{bmatrix} \tag{16}$$

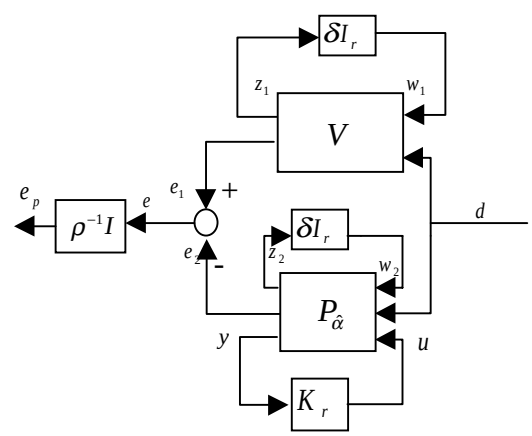

Figure 6

This setup can be recast in the classical robust performance design setup shown in Figure 7:

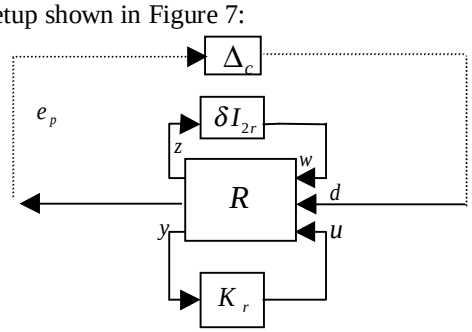

Figure 7

where:

$$\begin{bmatrix} z \\ e_p \\ y \end{bmatrix} = R \begin{bmatrix} w \\ d \\ u \end{bmatrix}, z = \begin{bmatrix} z_1 \\ z_2 \end{bmatrix}, w = \begin{bmatrix} w_1 \\ w_2 \end{bmatrix}, e_p = \rho^{-1}(e_1 - e_2),$$

$$R = \begin{bmatrix} R_{11} & R_{12} & R_{13} \\ R_{21} & R_{22} & R_{23} \\ R_{31} & R_{32} & R_{33} \end{bmatrix},$$

$$R_{11} = \begin{bmatrix} V_{11} & 0 \\ 0 & P_{\hat{\alpha}11} \end{bmatrix},\ R_{12} = \begin{bmatrix} V_{12} \\ P_{\hat{\alpha}12} \end{bmatrix},\ R_{13} = \begin{bmatrix} 0 \\ P_{\hat{\alpha}13} \end{bmatrix},$$

$$R_{21} = \begin{bmatrix} V_{21} & P_{\hat{\alpha}21} \end{bmatrix},\ R_{22} = V_{22} - P_{\hat{\alpha}22},\ R_{23} = P_{\hat{\alpha}23},$$

$$R_{31} = \begin{bmatrix} 0 & P_{\hat{\alpha}31} \end{bmatrix},\ R_{32} = P_{\hat{\alpha}32},\ R_{33} = P_{\hat{\alpha}33}.$$

With the inclusion of a fictitious uncertainty Δ_c for "closeness" in Figure 7, the final augmented plant is shown in Figure 8, where $\Delta_t := \begin{bmatrix} \Delta_c & 0 \\ 0 & \delta I_{2r} \end{bmatrix}$. This robust performance controller design can be transformed into a controller reduction procedure by means of robust performance analysis.

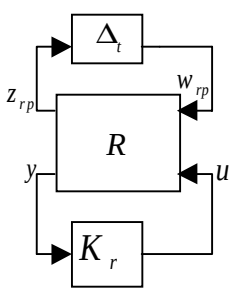

Figure 8

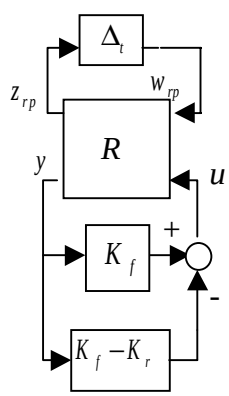

Figure 9

From the two equivalent block diagrams shown in Figure 8 and 9, we obtain in Figure 10 a robust performance setup in which $\tilde{\Delta}_K := W_k(\hat{K}_f - K_r)$ is viewed as a normalized controller uncertainty, where W_k is a stable scalar weighting function.

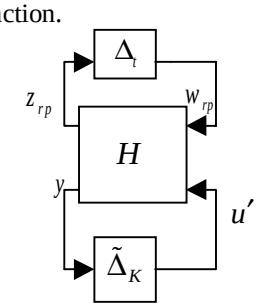

Figure 10

The idea is to ensure that K_r is close enough to $\hat{K}_f$ such that the size of $\Delta_K(j\omega) = (\hat{K}_f - K_r)(j\omega)$ is within the admissible uncertainty bound for which the system in Figure 10 will be robustly stable. We use the Main Loop Theorem [10] to prove the following result providing a basis for the proposed controller-order reduction technique. The theorem says that if the reduced-order controller is close enough to the full-order controller, then we can obtain both robust performance, and closed-loop frequency responses that are close to each other. Define the structures:

$$\Gamma_1 := \left\{ \Delta := \begin{bmatrix} \Delta_K & 0 & 0 \\ 0 & \Delta_c & 0 \\ 0 & 0 & \delta I_{2r} \end{bmatrix} : \Delta_K \in \mathbb{C}^{m \times p}, \Delta_c \in \mathbb{C}^{n_d \times n_e}, \delta \in \mathbb{R} \right\} \tag{17}$$

$$\Gamma_2 := \left\{ \Delta_t := \begin{bmatrix} \Delta_c & 0 \\ 0 & \delta I_{2r} \end{bmatrix} : \Delta_c \in \mathbb{C}^{n_d \times n_e}, \delta \in \mathbb{R} \right\}. \tag{18}$$

Theorem 1

Assume that K_f is a full-order stabilizing controller achieving robust performance, i.e., $\sup_{\omega \in \mathbb{R}} \mu_\Gamma[\mathcal{F}_L(P, K_f)(j\omega)] \le 1$ and assume that the reduced-order controller K_r has the same number of unstable poles as K_f. If, for every ω, $\mu_{\Gamma_1}[H(j\omega)] \le 1$ and $\left\|(K_f - K_r)(j\omega)\right\| \le \left|W_k^{-1}(j\omega)\right|$, then:

1. K_r stabilizes $\mathcal{F}_U\left[\mathcal{F}_L(P, K_r), \delta I_r\right], \forall \delta \in \mathbb{R}, |\delta| \le 1$,
2. $\sup_{\omega \in \mathbb{R}} \mu_\Gamma[\mathcal{F}_L(P, K_r)(j\omega)] \le 1$, and
3. $\left\|\mathcal{F}_U\left[\mathcal{F}_L(P, K_f), \delta I_r\right] - \mathcal{F}_U\left[\mathcal{F}_L(P, K_r), \delta I_r\right]\right\|_\infty \le \rho$, $\forall \delta \in \mathbb{R}, |\delta| \le 1$

Proof:

Assume that $\mu_{\Gamma_1}[H(j\omega)] \le 1$ and $\left\|(K_f - K_r)(j\omega)\right\| \le \left|W_k^{-1}(j\omega)\right|$. Then, for any $\Delta_K(s)$ such that $K_f - \Delta_K$ has the same number of unstable poles as K_f and such that $\left\|\Delta_K(j\omega)\right\| \le \left|W_k^{-1}(j\omega)\right|$, we have $\mu_{\Gamma_2}[\mathcal{F}_L(H, \tilde{\Delta}_K)(j\omega)] < 1, \forall \omega$ by virtue of the Main Loop Theorem. In particular, taking $\Delta_K = K_f - K_r$ and working our way back to the equivalent system of Figure 7, we have $\mu_{\Gamma_2}[\mathcal{F}_L(R, K_r)(j\omega)] < 1$ which, by the Main Loop Theorem, implies

$$\left\|\mathcal{F}_U\left[\mathcal{F}_L(P, K_f), \delta I_r\right] - \mathcal{F}_U\left[\mathcal{F}_L(P, K_r), \delta I_r\right]\right\|_\infty \le \rho, \quad \forall \delta \in \mathbb{R}, |\delta| \le 1.$$

Furthermore, $\forall \delta \in \mathbb{R}, |\delta| \le 1$, we have

$$\left\|\mathcal{F}_U\left[\mathcal{F}_L(P,K_r),\delta I_r\right]\right\|_\infty - \left\|\mathcal{F}_U\left[\mathcal{F}_L(P,K_f),\delta I_r\right]\right\|_\infty \le$$
$$\left\|\mathcal{F}_U\left[\mathcal{F}_L(P,K_r),\delta I_r\right] - \mathcal{F}_U\left[\mathcal{F}_L(P,K_f),\delta I_r\right]\right\|_\infty \le \rho$$

Hence,

$$\left\|\mathcal{F}_U\left[\mathcal{F}_L(P,K_r),\delta I_r\right]\right\|_\infty$$
$$\le \left\|\left\{\mathcal{F}_U\left[\mathcal{F}_L(P,K_r),\delta I_r\right] - \mathcal{F}_U\left[\mathcal{F}_L(P,K_f),\delta I_r\right]\right\}\right\|_\infty$$
$$+\left\|\mathcal{F}_U\left[\mathcal{F}_L(P,K_f),\delta I_r\right]\right\|_\infty \le \rho+\gamma<1$$

Finally, the robust stability of $\mathcal{F}_U\left[\mathcal{F}_L(P,K_r),\delta I_r\right]$ follows from a standard small-gain argument using the Nyquist plot. ■

To get a reduced controller achieving the specifications, we first proceed as follows. With the use of a fine grid of frequency points, an upper bound $\psi(\omega)$ on $\|\Delta_K(j\omega)\|$ is found such that the feedback interconnection in Figure 10 is robustly stable. This is carried out by using, for each frequency ω_i, a bisection technique to find the upper bound $\psi(\omega_i)$ that leads to $\mu_{\Gamma_1}\left[H(j\omega_i)\right]=1$. Then a fitting procedure can be used to obtain the stable weighting function $W_K(s)$ such that $\left|W_K^{-1}(j\omega)\right| \cong \psi(\omega)$. The upper bound $\psi(\omega)$ is also used as a criterion to reject the mode combinations for which the controller cannot be truncated without losing robust performance. For mode combination α, if $\exists\omega_j$ for which there is no $\psi(\omega_j)\ge 0$ such that $\left\|\Delta_K(j\omega_j)\right\|_\infty \le \psi(\omega_j)$ and $\mu_{\Gamma_1}\left[H_\alpha(j\omega_j)\right]\le 1$, then combination α is rejected because the existence of a corresponding reduced-order controller satisfying the robust performance specifications cannot be guaranteed. The application of this criterion avoids the need to resort to a heuristic in choosing what subset of mode combinations can be safely truncated.

The last step for controller reduction is the following: Given an order $q<\deg\{\hat{K}_f\}$, find a reduced q^{th}-order controller K_r with the same number of unstable poles as $\hat{K}_f$, and such that $\left\|\hat{K}_f(j\omega)-K_r(j\omega)\right\| \le \left|W_K^{-1}(j\omega)\right|$. If such a K_r cannot be found for $\hat{K}_f$, then the second-best full-order controller $K_{f\alpha}$ can be used, and so forth. Alternatively, the order q may be increased. For this weighted controller approximation problem, any suitable reduction technique can be used, e.g., [3],[4],[1]. In the example below, we used the weighted Hankel-norm approximation because of its close upper bound on the norm of the error between the nominal and the reduced controller. Note that since a $\mu-$synthesis may produce an unstable controller, it is suggested that only the stable part be used in the reduction. This ensures that K_r has the same number of unstable poles as K_f, and hence Theorem 1 can be used.

V- Flexible Aircraft Example

We illustrate our reduction approach using a flexible model of a B-52 bomber [8]. It consists of one short-period rigid-body mode, represented by the angle of attack and the pitch rate, and five bending modes taking into account the flexibility of the airframe. The state-space representation of the aircraft is given as:

$$\dot{x} = Ax + Bu + B_g w_g \tag{19}$$
$$y = Cx + Du \tag{20}$$

where $x\in\mathbb{R}^{12}$ is the state vector given by, $x^T=[\alpha\ q\ \eta_1\ \dot{\eta}_1\ \eta_2\ \dot{\eta}_2\ \eta_3\ \dot{\eta}_3\ \eta_4\ \dot{\eta}_4\ \eta_5\ \dot{\eta}_5]$, $u=\left[\delta_{el}\quad \delta_{hc}\right]^T\in\mathbb{R}^2$ is the vector of control surface angles (radians), $y\in\mathbb{R}$ is the vertical acceleration (g), $w_g=\left[w_{g1}\quad w_{g2}\quad w_{g3}\right]^T\in\mathbb{R}^3$ is the vertical gust velocity at three stations along the airplane (m/s), $\alpha\in\mathbb{R}$ is the angle of attack (radians), $q\in\mathbb{R}$ is the pitch rate (radians/s), and η_i is the modal coordinate of the ith-mode. The five flexible modes taken into account in the model are characterized by their frequency and damping ratio as given in Table 1.

Table 1: flexible modes

	1	2	3	4	5
ω_i	7.40	15.21	19.73	20.24	38.29
ς_i	0.337	0.056	0.010	0.067	0.023

The control objective is to reduce the effect of the wind gusts acting on the aircraft. This can be achieved by regulating the vertical acceleration of the aircraft subjected to these gusts. Using our order reduction procedure, we want to check what flexible mode(s) can be truncated and how much reduction can be performed on the controller while maintaining the robust performance obtained with the original full-order model/controller pair. Thus, we obtain a reduced model/controller pair that maintains the nominal robust performance level. The weighting functions on the acceleration and the control inputs are given by: $W_{per}(s)=\dfrac{40}{0.05s+1}$, and $W_u=\begin{bmatrix}1.25 & 0\\ 0 & 0.25\end{bmatrix}$, respectively. The weighting function $W_p(s)$ required in our procedure is composed of both $W_{per}(s)$ and $W_u(s)$.

Considering the effect of truncating a single flexible mode, we obtained that the best choice is to truncate mode 1, the lowest-frequency mode. The resulting full-order controller K_{f1} was of the 40th-order and it achieved the robust

performance level of $\max_{\omega_i} \mu_\Gamma[\mathcal{F}_L(P_1, K_{f1})(j\omega_i)] = 0.9999$. Choosing $\rho = 10^{-4}$, we found that we could reduce the order of the controller down to 18 with $\left\| W_K(K_r - K_f) \right\|_\infty = 3.0888 \times 10^{-7} < \rho$, and therefore without losing robust performance. Figure 11 below shows the magnitude Bode plot of Δ_K and W_K^{-1}, while Figure 12 shows the mixed-μ upper and lower bounds for both K_{f1} and K_r (the curves actually sit on top of each other). These figures show that robust closed-loop performance is preserved for the reduced 18th-order controller which also achieved $\max_{\omega_i} \mu_{\Gamma_1}[\mathcal{F}_L(P_1, K_r)(j\omega_i)] = 0.9999$.

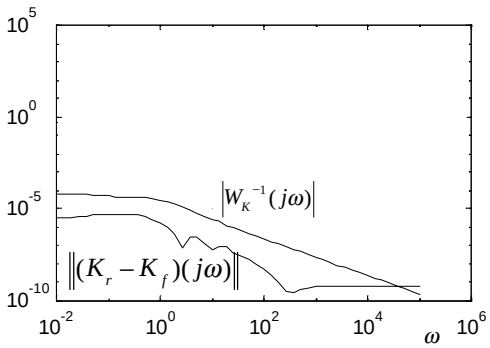

Figure 11

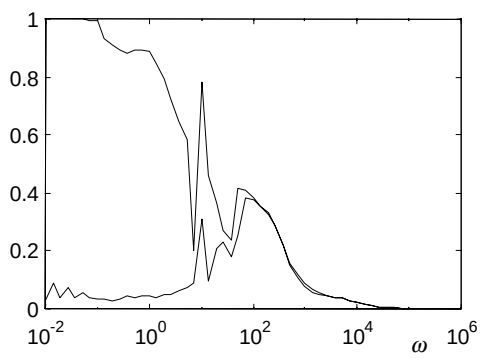

Figure 12

The other four candidate modes for truncation yielded full-order controllers that could not meet the robust performance specification. Their resulting computed "μ-norms" are given below.

$$\max_{\omega_i} \mu_{\Gamma_1}[\mathcal{F}_L(P_2, K_{f2})(j\omega_i)] = \max_{\omega_i} \mu_{\Gamma_1}[\mathcal{F}_L(P_4, K_{f4})(j\omega_i)] = 1.018$$

$$\max_{\omega_i} \mu_{\Gamma_1}[\mathcal{F}_L(P_3, K_{f3})(j\omega_i)] = 1.046$$

$$\max_{\omega_i} \mu_{\Gamma_1}[\mathcal{F}_L(P_5, K_{f5})(j\omega_i)] = 4.20 \qquad (21)$$

Since robust performance was met with an extremely small margin for the truncation of a single flexible mode, no other flexible mode could be further truncated.

VI- Conclusion

A systematic model/controller order reduction method for flexible aircraft was presented. The method determines which flexible modes can be truncated from the full-order model of the aircraft and finds a corresponding reduced-order controller preserving robust closed-loop performance. A single repeated real parametric uncertainty for each possible mode combination considered for truncation was adopted. This uncertainty covers both the modal parameter uncertainties and the effect of truncation of these modes from the full-order model. A sufficient condition involving the distance between the full-order and reduced-order controllers was given to preserve robust closed-loop performance with the reduced-order controller. This method is of interest for practical model and controller reduction for flexible aircraft because in this context it is important to keep the physical interpretation of the truncated and remaining modes, without sacrificing robust performance.

VII- References

[1] Anderson, B.D.O., Liu, Y. Controller reduction: Concept and approaches. *IEEE Transactions on Automatic Control*, 34(8), Aug. 1989.

[2] Balas, G.J., Doyle, J.C., Glover, K., Packard, A., Smith, R., *μ-Analysis and synthesis toolbox*, MUSYN Inc, and the MathWorks, 1995.

[3] Enns, D. Model reduction with balanced realizations: an error bound and frequency weighted generalization. *Proc. of the 23rd IEEE Conference on Decision and Control*, Las Vegas, Dec 1984. pp. 127-132.

[4] Glover, K. All optimal Hankel-norm approximations of linear multivariable systems and their L_∞ bounds. *IEEE Transactions on Automatic Control*, 39(6):1115-1193, 1984.

[5] Goddard, P.J., Glover, K., Controller reduction: weights for stability and performance preservation. *Proc. 32nd IEEE Conference on Decision and Control*, 1993, Vol. 3, pp. 2903-2908.

[6] Kavranoglu, D. Controller reduction for uncertain systems. *Proc. 35th IEEE Conference on Decision and Control*, Kobe, Japan, December 1996, pp. 887-892.

[7] Madelaine, B and Alazard, D. Flexible structure model construction for control system. *Proc. of the AIAA Conference on Guidance Navigation and Control*, Boston, 1998, pp. 1165-1175.

[8] McLean, D., Gust load alleviation control systems for aircraft. *Proc. IEE*, Vol.125, No.7, July 1978, pp. 675-685.

[9] Moore, B.C. Principal component analysis in linear systems: controllability, observability and model reduction. *IEEE Transactions on Automatic Control*, 26(1), Feb 1981.

[10] Packard, A., Doyle, J.C. The complex structured singular value. *Automatica*, Vol.29, pp.71-109, 1993.

[11] Skelton, R.E. Cost decomposition of linear systems with application to model reduction. *International Journal of Control*, 32 (6): 1031-1035, 1980.

[12] Yang, C.-D. , Chang, C.-Y., Sun., Y.P. Mixed μ-synthesis via H_2-based loop-shaping iteration. *AIAA Journal of Guidance, Control and Dynamics*, Vol. 21, No. 1, 1997.