CDC00-REG2105

Model-Controller Reduction for Flexible Structures Achieving Robust Performance

Nabil Aouf, Benoit Boulet
Department of Electrical and Computer Engineering and
McGill Centre for Intelligent Machines
McGill University
3480 University Street, Montréal, Québec, Canada H3A 2A7
aouf@cim.mcgill.ca, boulet@cim.mcgill.ca, tel: 514-398-1478 fax: 514-398-4470

Ruxandra Botez
Département de Génie de la Production Automatisée
Ecole de technologie supérieure
1100 Notre-Dame Street West, Montréal, Québec, Canada H3C 1K3
ruxandra@gpa.etsmtl.ca

Abstract: This paper presents a new model-order reduction method applied to a flexible structure. Our approach, based on robust closed-loop stability and performance criteria, determines which flexible modes can be truncated from the nominal model while preserving closed-loop stability and performance. We use parametric uncertainty to include both the uncertainties in the damping ratios and frequencies of the truncated modes and the effect of truncation of these modes from the nominal model.

Introduction:

Detailed dynamic modeling of flexible space structures or aircraft typically leads to the inclusion of several flexible modes in the model. Model reduction is then often needed for the following reasons:

(1) It may be easier to analyze the interactions of the most important modes in the structure on a reduced-order model.
(2) A linear time-invariant controller designed using $\mathcal{H}_\infty$ or $\mathcal{H}_2$ techniques and based on a reduced model will itself be of lower order, hence easier to implement,
(3) A reduced-order model may be appropriate for quick simulations of different scenarios.

In this paper, we are mainly focusing on the second reason. Namely, given a flexible structure model with N flexible modes, a performance specification, and a limited number of modes $k < N$ to be truncated, we want to find the "best" reduced model-controller pair for which the controller generates the closest sensitivity to the nominal sensitivity on the full-order model. The robustness issue is key here not only for the truncated modes that may cause spillover in closed loop, but also to uncertainty in these modes and the retained ones. From the point of view of analysis, it is also desirable to obtain a reduced-order model in modal form matching a reduced controller, rather than just a reduced controller, as obtained with standard controller reduction methods.

Many methods have been developed for order reduction of linear time-invariant continuous-time systems. Balanced reduction [5], cost analysis [13], and optimal Hankel-norm approximation [6], are the most popular of these methods, but most of them are used for open-loop reduction. The works of Enns [1], [2] led to what is called weighted balanced reduction which can be applied to stable plants, taking into account closed-loop stability preservation. Anderson extended this method by finding weights for closed-loop performance preservation. These methods have been usually applied for controller reduction [7] rather than plant reduction, which is arguably more complicated because the controller is not provided in advance. This "chicken and egg" problem naturally leads to multiple-step approaches.

Our approach was developed to reduce flexible aircraft models, but in this paper we will more generally study the truncation of flexible modes from flexible structure models. Low-order (or reduced) controllers are designed based on the best truncated models. We take into account robust performance and a "closeness" measure to the ideal closed-loop sensitivity obtained with a full-order controller applied on the nominal model. This technique leads to an algorithm that is simpler than the ones given in [1], [3], [4], and arguably more practical in that it can handle realistic constraints such as closed-loop performance and uncertainty in the truncated modes.

The fist stage of the algorithm consists of testing all combinations of a fixed number of modes that can be truncated, and yields the best candidate combinations for truncation maximizing the closed-loop robust performance criterion. We use the novel idea that parametric uncertainty in the candidate flexible modes in the full-order model can represent the effect of the truncation of these modes. We use a mixed-μ setup in our approach to analyze robust performance. The set of best candidate mode combinations is then processed a second time to find the "best" combination for truncation. This is done by designing corresponding (reduced) controllers based on the candidate truncated models, which are then tested for stability of the closed loop with the full-order model. The subset of stabilizing controllers are finally tested by computing the distances in $\mathcal{H}_\infty$ of their corresponding closed-loop sensitivities when applied to the full-order model, to the best possible sensitivity obtained with the optimal full-order controller.

Due to the complete enumeration of all combinations of k modes in the algorithm, it is limited to models with a relatively small number of flexible modes. However, it is not unreasonable to assume that a few days of intense computations would represent a relatively small cost in the overall design of a new commercial aircraft or spacecraft with flexibilities.

Problem Setup

The nominal transfer matrix model of a flexible structure is expressed from its modal state-space realization as:

$$G_0(s) = \left(\begin{array}{c|c} A_0 & B_0 \\ \hline C_0 & D_0 \end{array}\right) := C_0(sI - A_0)^{-1} B_0 + D_0, \qquad (1)$$

where $A_0 \in R^{n\times n}$ is in modal form, i.e., $A_0 = diag\{A_i\}$, $A_i = \begin{pmatrix} -\zeta_i\omega_i & \sqrt{1-\zeta_i^2}\,\omega_i \\ -\sqrt{1-\zeta_i^2}\,\omega_i & -\zeta_i\omega_i \end{pmatrix}$ $i = 1,\ldots,N$, and N is the number of flexible modes of our model; ζ_i, ω_i are the damping ratio and the undamped natural frequency of the ith mode; $B_0 \in \mathbb{R}^{2N\times m}, C_0 \in \mathbb{R}^{p\times 2N}, D_0 \in \mathbb{R}^{p\times m}$. The truncation of the ith mode from the nominal model can be seen as eliminating the effect of this mode. Because there is no interaction between the modal states in the modal form used, this truncation corresponds to setting to zero the 2×2 matrix A_i and the corresponding rows and columns of the matrices B_0 and C_0 respectively from the nominal state-space representation of $G_0(s)$.

Uncertainty Model:

Parametric uncertainty may be less conservative than other types of uncertainties and may lead to a more realistic representation, especially parametric uncertainty in the neglected (truncated) modes. In our approach, we treat both this kind of uncertainty and the truncation of the corresponding modes through the same setup and with the use of a single real scalar perturbation. We ask for a maximum of performance and robustness against an uncertainty set containing the parameter uncertainty and the effect of truncation as well. This allows us to determine which are the best candidate combinations of truncated modes to take into account as a first ordering of the algorithm. A second ordering leads to the best reduced model-controller pair achieving our desired criterion of closeness to a desired closed-loop sensitivity in $\mathcal{H}_\infty$.

For a fixed number of flexible modes to be truncated k, we define the set of all possible combinations of k flexible modes to be truncated as follows:

$$\mathcal{A}_k := \left\{\alpha = \{\alpha_1,.....,\alpha_N\} : \alpha_i \in \{0,1\}, \sum_{i=1}^{N} \alpha_i = k\right\}, \qquad (2)$$

where $\alpha_i = 1$ to truncate and $\alpha_i = 0$ to keep the ith mode. This set contains $C_k^N := \begin{pmatrix} N \\ k \end{pmatrix}$ candidate combinations. For each combination, we define corresponding perturbations of the modal state-space matrices representing modal parameter uncertainty and the truncation effect of these specific modes. First, let $T := diag\{\alpha_1 I_2,\ldots,\alpha_N I_2\}$. The perturbed plant model is then defined as follows:

$$G(s) := \left[\begin{array}{c|c} A_0 + \Delta_A(\alpha) & B_0 + \Delta_B(\alpha) \\ \hline C_0 + \Delta_C(\alpha) & D_0 + \Delta_D(\alpha) \end{array}\right] \qquad (3)$$

where the perturbations of the state-space matrices (see [10]) are defined by

$$\begin{pmatrix} \Delta_A & \Delta_B \\ \Delta_C & \Delta_D \end{pmatrix} := \delta \begin{pmatrix} A_\alpha & B_\alpha \\ C_\alpha & D_\alpha \end{pmatrix}, \quad \delta \in \mathbb{R}, |\delta| \le 1, \tag{4}$$

and the *truncation matrices* $A_\alpha, B_\alpha, C_\alpha, D_\alpha$ are given by

$$A_\alpha = TA_0,\ B_\alpha = TB_0,\ C_\alpha = C_0T,\ D_\alpha = D_0. \tag{5}$$

The real uncertainty parameter δ varies between –1 and 1, covering more than a single objective. The correspondence between values of the parameter δ and the objectives in our design is given as follows:

$$\begin{cases} \delta = -1 & \text{Mode truncation} \\ \delta = 0 & \text{Nominal model} \\ \delta \in \left]-1, 0\right[\cup \left]0, 1\right] & \text{Parametric uncertainty of the truncated modes} \end{cases} \tag{6}$$

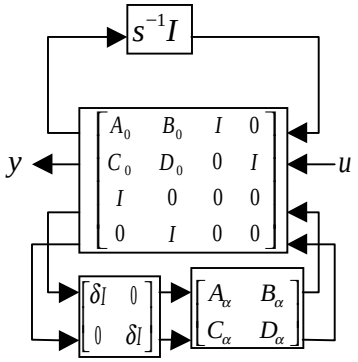

Figure 1

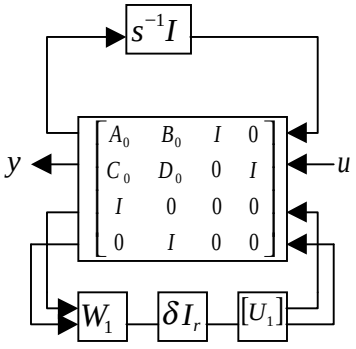

Figure 2

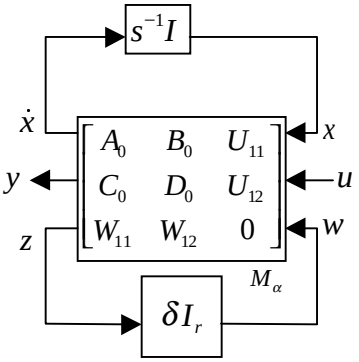

Figure 3

By including the matrices $A_\alpha, B_\alpha, C_\alpha, D_\alpha$ representing the uncertainty and the effect of the truncation, the augmented plant model to be controlled is given in Figure 1. In fact, these matrices can be lumped in the augmented plant model. The multiplicity of the uncertainty δ represented in Figure 1 can be high. Using a singular value decomposition of $\begin{bmatrix} A_\alpha & B_\alpha \\ C_\alpha & D_\alpha \end{bmatrix}$, we can reduce the number of repeated perturbations δ, which leads to a less conservative uncertainty model:

$$\begin{bmatrix} A_\alpha & B_\alpha \\ C_\alpha & D_\alpha \end{bmatrix} = U\Sigma V^T = \begin{bmatrix} U_1 & U_2 \end{bmatrix} \begin{bmatrix} \Sigma_r & 0 \\ 0 & 0 \end{bmatrix} \begin{bmatrix} V_1 \\ V_2 \end{bmatrix} = U_1 \Sigma_r V_1 = U_1 W_1, \tag{7}$$

where $r = rank\begin{bmatrix} A_\alpha & B_\alpha \\ C_\alpha & 0 \end{bmatrix} \le \max\{2N+m, 2N+p\}$ and $W_1 = \Sigma_r V_1$. Figures 2 and 3 show, respectively, how the multiplicity of δ is reduced to r and the matrices $W_1 = \begin{bmatrix} W_{11} & W_{12} \end{bmatrix}$, $U_1 = \begin{bmatrix} U_{11} \\ U_{12} \end{bmatrix}$ are incorporated in the augmented plant.

The reduction in the multiplicity of δ yields a more accurate and less conservative uncertainty set. The transfer function between y and u is represented by: $G(s) = \mathcal{F}_L\left[\mathcal{F}_U(M_\alpha, s^{-1}I), \delta I_r\right]$. Following the standard μ-synthesis scheme, we need to include the term $s^{-1}I$ in the dynamics of the system, so we define $\begin{pmatrix} y \\ z \end{pmatrix} = H_\alpha(s)\begin{pmatrix} u \\ w \end{pmatrix}$ such that $H_\alpha(s) = \mathcal{F}_U(M_\alpha, s^{-1}I)$. Furthermore, by reversing the order of the inputs and outputs of $H_\alpha(s)$, we obtain the generalized plant model $Q_\alpha(s)$, as given by Figure 4, mapping $\begin{pmatrix} w \\ u \end{pmatrix}$ to $\begin{pmatrix} z \\ y \end{pmatrix}$ and representing a standard setup for μ-synthesis providing robustness against a single repeated real perturbation.

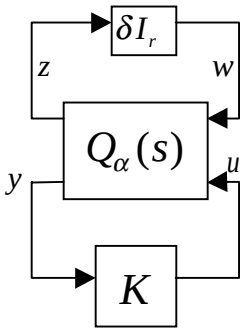

Figure 4

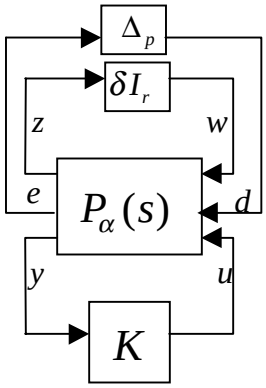

Figure 5

Since we are not just interested in robust stability as a selection criteria of the candidate mode combinations for truncation, we introduce the notion of robust performance as a principal objective that truncated models have to achieve with a full-order controller. Inputs and outputs of interest (reference signals, disturbances, tracking error, etc.) are thus added to $Q_\alpha(s)$ together with performance weighting functions to obtain the generalized plant model $P_\alpha(s)$ mapping $\begin{pmatrix} w \\ d \\ u \end{pmatrix}$ to $\begin{pmatrix} z \\ e \\ y \end{pmatrix}$.

Figure 5 shows the $\mu-$synthesis setup for robust performance. $\Delta_p \in \mathbb{C}^{nd\times ne}$ is a fictitious uncertainty included for performance, linking the exogenous inputs *d* to the outputs to be controlled *e*. The uncertainty structure is defined as follows:

$$\Gamma := \left\{ \Delta = \begin{bmatrix} \Delta_p & 0 \\ 0 & \delta \end{bmatrix} : \Delta_p \in \mathbb{C}^{n_d \times n_e},\ \delta \in \mathbb{R} \right\}. \tag{8}$$

We use mixed-μ theory [12], to synthesize a controller achieving the best robust performance index. Since our technique uses only real scalar uncertainty parameter δ, with a reduced multiplicity, and because we add a complex fictitious performance uncertainty Δ_p, it should be easier to find the μ_Γ bound than for the case of a single real perturbation [15]. Note that if a given combination α leads to a robust performance index $\mu_\Gamma\left\{\mathcal{F}_L\left[P_\alpha(s), K(s)\right]\right\} < 1$, then this combination of modes can be truncated from the model and the closed loop would still achieve the desired performance specification.

Reduction technique:

Based on the setup proposed in Figure 5, the most important criterion taken into account in the first stage of our technique is the achieved robust performance level. That obviously means that we use the closed-loop system, with all possible combinations of modes to be truncated, rather than the open-loop system model.

Model reduction based on open-loop models, and for various norms, features the useful additivity property, i.e., each mode adds an independent contribution to a given criterion (say closeness to the full-order model). This property greatly facilitates modal truncation in open loop: the contribution of each mode to the criterion is computed separately, and the best combination of k modes to be truncated is just the k modes with the smallest contribution to the criterion. On the other hand, our closed-loop based algorithm must test all combination of k modes. However, it includes the two essential notions of robust stability and performance that are critical for control applications. We based our method on an two-stage ordering. The first ordering uses the robust performance criterion and the second one checks for closed-loop stability and computes performance in terms of closeness to a desired sensitivity in $\mathcal{H}_\infty$. Our reduction technique not only finds a good reduced-order model but also its associated best reduced controller, providing a good tradeoff between stability and performance of the reduced controller on the nominal full-order model.

Algorithm:

Our model reduction algorithm can be formulated as follows:

Initialization:

- Let $G_0(s)$ be the nominal model and $K_0(s)$ be an $\mathcal{H}_\infty$-optimal controller for it.
- Let N be the number of flexible modes in the nominal model.

- Fix *k*, the number of flexible modes to be truncated.
- Fix the minimum robust performance required $P_{\min}$.
- Generate the set $\mathcal{A}_k$ of C_k^N candidate combinations of k truncated modes.
- $L = \phi$ is the set of candidate combinations in $\mathcal{A}_k$ that meet the robust performance criterion.

Ordering 1:
For $j = 1, \ldots, C_k^N$

- Design a full-order controller $K_j(s)$ using a μ-synthesis technique with respect to the structured uncertainty Γ for mode combination $\alpha^j \in \mathcal{A}_k$.
- Compute $P_j = \mu_\Gamma \left\{ \mathcal{F}_L \left[P_{\alpha^j}(s), K_j(s) \right] \right\}$, the robust performance index with mode combination α^j.
- If $P_j \le P_{\min}$ then $L = L \cup \alpha^j$ and there exists a full-order $K_0(s)$ that reaches the minimum robust performance specification $P_{\min}$ for this j^{th} candidate combination.

Ordering 2:

- Let n_p be the number of mode combinations retained from Ordering 1 (number of elements in *L*)

For $m = 1, \ldots, n_p$

- Reduce the nominal model $G_0(s)$ to $G_{rm}(s)$ as given by α^m.
- Design a reduced controller K_{rm} for the reduced model G_{rm} and compute the closed loop transfer matrix $\mathcal{F}_L(G_{rm}, K_{rm})$.
- If $\mathcal{F}_L(G_{rm}, K_{rm})$ is unstable, then this m^{th} candidate is automatically rejected.
- Else:
  Calculate $P_m = \left\| \mathcal{F}_L(G_0, K_0) - \mathcal{F}_L(G_{rm}, K_{rm}) \right\|_\infty$ and store it in a list *P*.
  End

End

The best reduced model-controller pair G_r, K_r is the pair associated with $\min\{P_m : P_m \in P\}$.

Numerical Example:

To illustrate our method we chose a flexible system taken from [14], consisting of three masses $m_1 = 11, m_2 = 5, m_3 = 10$, stiffness $k_1 = k_4 = 10, k_2 = 50, k_3 = 55$, and damping $d_i = 0.01 k_i$, $i = 1,2,3,4$. The input u is applied such that $f_1 = u$, $f_2 = 2u$, $f_3 = -5u$ where $f_i, i = 1,2,3$ are the forces applied on each mass respectively. The output is

$y_1 = 2q_1 - 2q_2 + 3q_3$, where $q_i, i = 1,2,3$ are the mass displacements. A disturbance *d*, is added to the plant output y_1 to get the system output $y = y_1 + d$. We represented this system in the state-space modal form such that the nominal damping ratios and frequencies respectively are: $\zeta_1 = 0.025, \omega_1 = 5.12, \zeta_2 = 0.012, \omega_2 = 2.43,$ $\zeta_3 = 0.0044, \omega_3 = 0.87$.

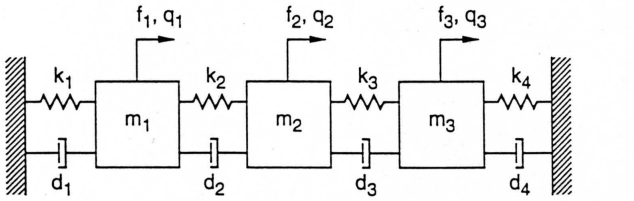

Figure 6

For our model, we need to find which flexible modes can be truncated without giving up too much performance of the nominal model. As presented previously, the parametric uncertainty of the candidate mode to be neglected will cover also the effect of the truncation of this candidate. The performance and the constraints on the controller specified for the nominal model are given by the weighting functions $W_p(s) = \dfrac{s+3}{60.5s + 0.03}$ and $W_u = 0.1$, respectively. $W_p(s)$ specifies that the closed-loop sensitivity should be smaller than 0.01. The sensitivity consists in this case of the transfer function matrix $T_{dy}(s)$ from the disturbance *d* to the output of the system *y*. The parametric uncertainty δ, for a "combination" containing a single mode to be truncated, has multiplicity 3. As we consider combinations with more than a single mode the multiplicity of the perturbation δ increases. Note that for each additional mode to be truncated in a combination, the uncertainty set will be augmented by two replications of the same perturbation δ. Added to this parametric uncertainty is the robust performance (fictitious) uncertainty Δ_p, which is complex and normalized by the weighting function $W_p(s)$.

A μ-design is performed for such a model to analyse the robust performance obtained under the previous considerations. A well-known solution to find the μ-bounds is provided by the *D-K* iteration algorithm [11]. One criticism about this algorithm is that it often cannot deal with high-order systems, or even with an increasing number of uncertainties which in general reflects realistic constraints. We noticed that when we applied our proposed reduction algorithm for the mixed μ design, a large number of iterations were required to approach the actual value of μ, which led to an increase in the number of states of the augmented model. This made the computation of a controller very difficult. For this reason we investigated alternative algorithms that avoid the drawback of the *D-K* iteration algorithm, and approach $\mu_\Gamma(F_l[P_{\alpha^j}(s), K_j(s)])$ with lower-order

augmented plant models. The approach used is a μ-synthesis based on the iterative computation of optimal $\mathcal{H}_2$ controllers [9].

Our proposed algorithm gives the designer the freedom to specify from the setup the number of modes to truncate and the minimal robust performance index during the first ordering. For this example, we wanted to find the best reduced models by truncating one flexible mode, and two flexible modes respectively. Table 1 shows the results of our algorithm applied to the three-mass flexible system model when we ask to truncate one flexible mode. The first ordering takes into account the single modes truncations that achieve at least a robust performance index of 0.8. The best choice was the first "combination" with $p_1 = 0.637$. This led in the second ordering, with the corresponding reduced controller, to closed loop stability and an index of closeness to the nominal closed loop of $\|h1\|_\infty = 0.026 \times 10^{-4}$. If we relax the robust performance specification by fixing the minimum index to 1.0012, we obtain in the first ordering two possible combination candidates (combination 1 and combination 2) with their achieved robust performance indices $p_1 = 0.637$ and $p_2 = 1.0011$, respectively. In this case, the best combination obtained from the second ordering is combination 2 rather than combination 1, which was the best one for the tighter robust performance specification. This make sense because in the first stage of the algorithm, the emphasis is on robustness and performance, but in the second ordering, we are asking for maximal closeness to the nominal closed-loop system by the index $\|hi\|_\infty$. Hence, the designer has the freedom to make a trade-off between robust performance and approaching the behaviour of the nominal full-order closed loop system without uncertainty. In general, especially when one has to consider a larger number of flexible modes, a good choice would appear to be placing a strict requirement on robust performance in the first stage, and take the combination with the best index in the second stage.

Table 2 shows the results when we want to truncate two flexible modes from the nominal model. For this case we asked for less robust performance than in the first case. If we would have specified the same robust performance, we would not have been able to find any combination of two truncated flexible modes achieving our objectives, which would imply that no reduction to one flexible mode is acceptable. From Table 2 we remark that it was also required to make a certain trade-off between robust performance and nominal behaviour. The best indices $\|hi\|_\infty$ found in this case are greater than in Table 1, which confirmed the difficulty to get a good reduced model/controller pair when the number of truncated flexible modes increases.

Table 1

	First ordering : Robust performance	Second ordering: stability and nominal performance $\left\|F_l[P_0(s), K_{rm}(s)] - F_l[P_0(s), K_0(s)]\right\|_\infty$
	Combinations	Combinations
$p_{\min} = 1.5$	$p_3 = 1.304$	$\|h3\|_\infty = 0.5118 \times 10^{-4}$
$p_{\min} = 2$	$p_2 = 1.87 \quad p_3 = 1.304$	$\|h2\|_\infty = 0.5104 \times 10^{-4}$

Table 2

	First ordering : Robust performance	Second ordering: stability and nominal performance $\left\|F_l[P_0(s), K_{rm}(s)] - F_l[P_0(s), K_0(s)]\right\|_\infty$
	Combinations	Combinations
$p_{\min} = 1.5$	$p_1 = 0.637$	$\|h1\|_\infty = 0.026 \times 10^{-4}$
$p_{\min} = 2$	$p_1 = 0.637 \quad p_2 = 1.0011$	$\|h2\|_\infty = 0.0195 \times 10^{-4}$

Conclusion:

We introduced a new approach for model-controller reduction. This approach takes into account the closed-loop stability and performance preservation as criteria for truncation of the flexible modes. Using the proposed algorithm, one can find the best reduced model, from a list of possible candidates, achieving the desired robust performance in closed loop. Then, through a second ordering, the corresponding best (with respect to stability and sensitivity) reduced controller is selected. The method proposed has the ability to represent the effect of mode truncation by a real parameter uncertainty representing also the uncertainties in the neglected modes, an important aspect to take into account. This is not the case for many papers published in this field of research. We used an efficient method to find the μ bound, the index of the first ordering, which was difficult to compute with classical tools such as $D-G-K$ iteration. The results obtained in the numerical example show that our method offers a tradeoff that might correspond better to the real needs of the control engineer in trying to find a reduced model-controller pair.

Bibliography:

[1]- D. Enns. Model reduction for control system design. PhD thesis, Stanford University, 1984.

[2]- D. Enns. Model reduction with balanced realizations: an error bound and frequency weighted generalization. In proceedings of the 23rd conference on Decision and Control, Las Vegas, Dec 1984. IEEE p127-132.

[3]- Madelaine, B and Alazard, D. Flexible structure model construction for control system. In Proceedings of the Conference on Guidance Navigation and Control. AIAA, Boston 1998 p 1165-1175.
[4]- Madelaine, B and J.-P. Chretien. Weighted balanced model reduction of a flexible structure. In Proceedings of the American Control Conference, Philadelphia. June 1998.
[5]- B.C. Moore. Principal component analysis in linear systems: Controllability, Observability and model reduction. IEEE Transactions on Automatic Control, 26(1), Feb 1981.
[6]- K. Glover. All optimal Hankel-norm approximations of linear multivariable systems and their L_∞ bounds. IEEE Transactions on Automatic Control, 39(6): 1115-1193, 1984.
[7]- B.D.O. Anderson and Y. Liu. Controller reduction: Concept and approaches. IEEE Transactions on Automatic Control, 34(8), Aug 1989.
[8]- Yang, C.-D and Chang, C.-Y., μ -Synthesis Using Linear Quadratic Gaussian Controllers. Journal of Guidance, Control and Dynamics, Vol 19 No 4. 1996 pp 886-892.
[9]- Yang, C.-D , Chang, C.-Y and Y.-P. Sun., Mixed μ -Synthesis via H_2 -Based Loop-Shaping Iteration. Journal of Guidance, Control and Dynamics, Vol 21 No 1, Engineering notes. 1997
[10]- B.Morton and R.McAfoos, A Mu-test for real parameter variations. In Proceedings of the American Control Conference, pp 135-138, 1985.
[11]- Balas, G.J., Doyle, J.C., Glover, K., Packard, A., Smith, R., 1995 μ -Analysis and synthesis toolbox MUSYN Inc, and the MathWorks, Inc.
[12]- Young, P.M and J.C. Doyle. Computation of μ with real and complex uncertainties. In Proceedings of the 29th IEEE Conference on Decision and Control, pp 1230-1235, 1990.
[13]- R.E. Skelton. Cost decomposition of linear systems with application to model reduction. In International Journal of Control, 32 (6): 1031-1035, 1980.
[14]- Gawronski, W, Balanced Control of Flexible Structures. Lecture Notes in Control and Information Sciences 211 Springer-Verlag London Limited 1996.
[15]- Packard, A and Pandey.P. Continuity of the real/complex structured singular value IEEE Transactions on Automatic Control, Vol. 38 no 3 pp415-428, March 1993.